FINAL REPORT

Characterization of Aerosols Generated from A Consumer Spray Product-Phase II

Prepared for

The Soap and Detergent Association

Battelle Study No. N003043B

by

Toxicology Northwest
900 Battelle Blvd.
Richland, WA 99352

FINAL REPORT

Characterization of Aerosols Generated from A Consumer Spray Product-Phase II

Mark L. Clark, M.S.E.
Senior Research Scientist

2-21-00
Date

John R. Decker, Jr., B.S.
Study Director

2-22-00
Date

COMPLIANCE STATEMENT

This study was conducted in the spirit of EPA Good Laboratory Practices Regulations (40 CFR, Part 792) for the conduct of non-clinical studies. The study was not listed on Battelle's list of regulated studies. All records that would be required to reconstruct the study will be maintained. All data generated from any portion of this study will be retained at Battelle until acceptance of the final report, when all materials will be returned to the archival facility designated by the Sponsor.

JR Decker Jr

John R. Decker, Jr., B.S.
Study Director

2-22-00
Date

CONTENTS

LIST OF TABLES

LIST OF FIGURES

LIST OF APPENDICES

1.0 INTRODUCTION

The purpose of this study was to characterize aerosols present in the expected breathing zone of a potential user after simulated heavy usage delivery of an enzyme-containing laundry product. The aerosol was generated from a trigger sprayer attached to a bottle containing the detergent formulation. The experiment was designed to determine the concentration of enzyme protein in the breathing zone during the simulated spray episode using both high and low volume sampling techniques. The tests were conducted by actuating the trigger sprayer 6 inches from cloth targets that were oriented vertically, while simultaneously collecting aerosol samples by means of filters and time-of flight instrumentation. An aerodynamic particle sizer (Aerosizer, API) was used to measure the aerosol size distribution, the peak of relative mass concentration and its decay pattern during a spray episode. Filter samples, collected at high or low volumetric flow rates, were analyzed by the ELISA method to determine the concentration of enzyme protein in the aerosol sample.

The study was conducted at the Battelle Richland facility (Battelle Toxicology Northwest). The study protocol was prepared by Battelle and approved by the Sponsor's study monitor, Dr. Jenan Al-Atrash of the Soap and Detergent Association. Mr. John Decker served as the study director. A copy of the signed protocol and the amendments are attached in Appendix B. The study was conducted as Battelle Study Number N003043B. The Study was initiated in mid April 1999.

2.0 MATERIALS AND METHODS

2.1 Test Articles

2.1.1 Prespotter

The test material was SDA Generic Laundry Prespotter (formulation 14979-H-4-4) contained in plastic bottles. The identity, purity, stability and composition of the test article were the responsibility of the Sponsor. A description of formulation 14979-H-4-4 is attached as Appendix C. The MSDS for the test article is included in Appendix D.

For Phase II tests, a total of 4 bottles were received at Battelle Toxicology Northwest. Two bottles contained the prespotter with no enzyme and two bottles contained the prespotter with enzyme (Savinase 16.0L EX manufactured by Novo Nordisk) at a stated concentration of 0.5% by weight. Savinase 16.0L EX contains 0.0405 grams of pure enzyme protein per gram of Savinase 16.0L EX. Therefore there are 0.203 mg of pure Savinase protein per gram of prespotter product. The details of the shipments are listed in Table 2.1. Lot numbers 15024-H-47-3 and -4 were sub lots from the formulation 14979-H-4-4. In each case the two bottles with the same lot number were labeled as #1 and #2.

Table 2.1 Prespotter Inventory

Date Received	Lot Number (Formulation)	Stock Number	Number of Bottles	Formulation Description
02-26-99	15024-H-47-3	N003043A-AC-L2AW-III-3	2	0.5% Savinase 16.0L EX
02-26-99	15024-H-47-4	N003043A-AC-L2AW-III-4	2	Without enzyme

The bottles of prespotter were stored at room temperature upon receipt. The storage condition was appropriate for the stability of the test material according to the information provided by the Sponsor. The expiration date for the test material was not provided.

2.1.2 Fabric and Detergent

The fabric received at Battelle Toxicology Northwest was 65/35 Khaki cotton/polyester blend material that required pre-washing. A total of 60 yards x 45 inches of the fabric was received on March 1, 1999.

The detergent used for pre-washing the fabric was received at Battelle Toxicology Northwest on July 7, 1998. The detergent was manufactured by Lever Brothers Company, and was labeled as Ultra "all"® Free Clear Laundry Detergent (Batch No. 835; Section LHD). The identity, purity, stability and composition of the material were the responsibility of the Sponsor. The detergent was stored under room temperature condition during the study.

The fabric was pre-washed according to the Standard Operating Procedure (SOP BE.I-006) developed by Battelle and approved by the Sponsor (Appendix F). Following washing and air-drying, the fabric was cut into 18" x 18" targets that were used throughout the experiment.

2.1.3 Trigger Sprayers

The identity of the trigger sprayers was the responsibility of the Sponsor. Six trigger sprayers (TS800) manufactured by Calmar Dispensing System, Inc. were received at Battelle Toxicology Northwest on July 7, 1998. The specifications for these trigger sprayers are included in Appendix E. The specified average output of the sprayers, based on water at 90 strokes per minute, is no less than 0.75 ml per stroke. The specified spray pattern, also based on water, is a nearly circular pattern with a diameter of no less than four inches at a distance of approximately eight inches. The specifications are dependent on the viscosity and surface tension of the test article. The six trigger sprayers were evaluated during Phase I to determine emitted aerosol size distribution, output per stroke and spray pattern in order to avoid choosing a trigger sprayer with abnormal characteristics for the experiment. The trigger sprayers were stored under room temperature conditions during the study.

The trigger sprayer identified in the Pilot Study (Phase I) was evaluated for use during this study. Sprayer characteristics, i.e., mass output and spray pattern, were compared to those recorded during the Pilot Study. Mass output was determined as the average mass loss from the trigger sprayer container after 5 consecutive actuations. Also, following the practice developed in Phase I, mass balance measurements were performed only once. Based on these tests it was determined that the characteristics of spray mass output and pattern had not changed significantly since the Pilot Study. Sprayer #4 was used for the majority of tests. Trigger sprayer #5 was used during the low volume product evaluation procedure when it became necessary to repeat the test due to the apparent failure of spray trigger assembly #4 during the test sequence. This failure was manifested by excessive leakage of liquid from the trigger assembly down the exterior of the reservoir, and data results significantly out-of-line with expectations based on previous tests (see Appendix H).

2.2 Experimental Methods

2.2.1 Test Chamber

All spray tests were performed in a ~13 cubic meter test chamber with internal dimensions of 88 inches (223.5 cm) in height, 94 inches (238.8 cm) in depth, and 94 inches (238.8 cm) in width. A door was located on the left front of the chamber. Windows in the front and right sides of the chamber allowed external viewing and video taping of the test procedures. The chamber was equipped with a high volume (~2000 cfm [56.6 m^3/min]) re-circulating HEPA filtration system that was used between spray episodes to eliminate residual aerosol inside the chamber and to reduce aerosol background levels. The filtration system was operated for about 5 minutes with the chamber door closed prior to each spray test. During the spray test, efforts were taken to minimize air currents by sealing the chamber, turning off the HVAC system and limiting human movement. A table was located at the right side of the room. All of the spray test apparatus was assembled on the top of the table.

2.2.2 Product Use Simulation Configuration

The product use simulation configuration is detailed in Figures 2.1 and 2.2. The locations of the trigger sprayer and the target were intended to simulate typical use of the laundry product.

Products were tested on a 36"tall x 48" wide x 30" deep (91 x 122 x 76 cm) table with a 6" (15 cm) tall back-splash. The table was located 6" (15 cm) from the right side wall and 6" (15 cm) from the front wall of the test chamber (Figure 2.1).

The trigger sprayer was actuated a distance of 6 inches (15 cm) from the spray nozzle to a target. The target was a single layer piece of fabric backed with a single layer of plastic-backed absorbent paper. The fabric type was a polyester/cotton blend material (approximately 18 inches × 18 inches [46 x 46 cm]). The target was supported with the top edge 19.25 inches (49 cm) from the tabletop and the surface parallel to and 6 inches from the front edge of the tabletop. A pan was placed below the target to catch any test article that dripped from the target. The pan was raised 1.75 inches (4.4 cm) from the tabletop by a spacer. The spray nozzle was located 10.25 inches (26 cm) above and at a 90-degree angle to the tabletop and 6 inches (15.2 cm) from the surface of the target.

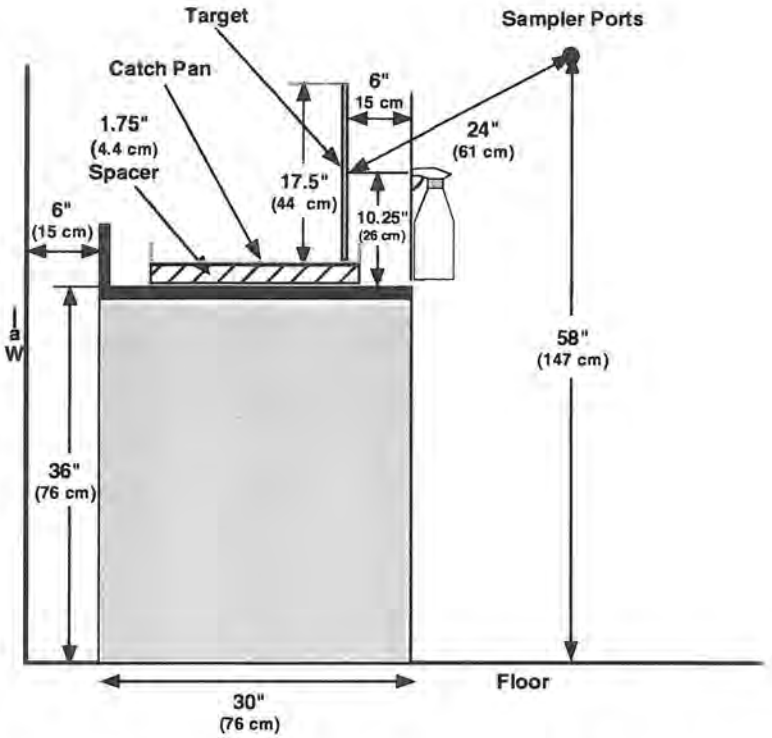

Figure 2.1 Side View of Relative Orientation of Table, Trigger Sprayer, Vertical Target, and Sampler Ports (Aerosizer and Filter)

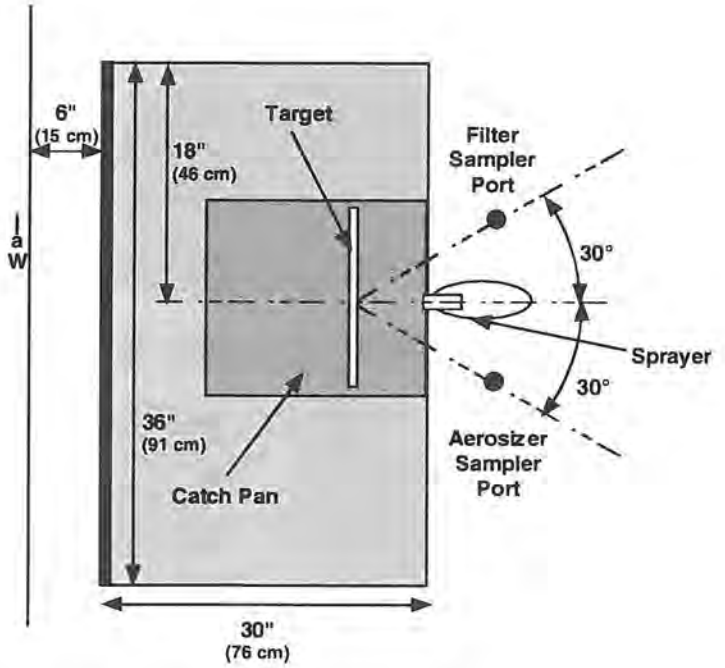

Figure 2.2 Top View of Relative Orientation of Table, Trigger Sprayer, Vertical Target, Sampler Ports (Aerosizer and Filter)

2.2.3 Breathing Zone Aerosol Measurement

Relative aerosol mass and particle size distribution in the simulated breathing zone was measured using an aerodynamic particle sizer (Aerosizer Model LD, Amherst Process Instruments, Amherst, MA). The Aerosizer was set up for continuous measurement of aerosol concentration with a sampling period of 30 seconds (plus a 3-second data reduction lag between sampling episodes). The Aerosizer output that followed each 30-second sampling period included the relative mass loading and mass median aerodynamic diameter (MMAD), which were dependent on the time after spraying. Note that the Aerosizer reported relative, not absolute, mass loading. Mass loading data derived from Aerosizer summaries were used to generate enzyme protein concentration vs. time profiles based on filter sample results.

The Aerosizer, which was attached to an Aero-Diluter, was operated at a sampling flow rate of 2 l/min. The Aero-Diluter operates by controlling the mass flow of sheath air supplied to the Aerosizer. The total airflow through the Aerosizer nozzle remains constant at approximately 6 l/min because it is operated at a choke flow condition. This total flow is the combination of sampling airflow, i.e., 2 l/min, and filtered sheath airflow, the latter emanating from a source location remote from the sample location. By regulating the sheath airflow, the sampling airflow can be determined by the difference between the total airflow and the sheath

airflow. The calibration procedure for the Aero-Diluter was followed each day of testing after the device reached its normal operating temperature. The normal warm up time for the Aero-Diluter is about 2 hours.

A small nozzle was used in the Aerosizer during the experiments. The size measurement range for the small nozzle was 0.1-200 µm. The inside diameter of the sample orifice used to introduce aerosol into the Aerosizer was 0.273 cm. At a flow rate of 2 l/min, the resultant face velocity was ~570 cm/sec.

A single aerosol filter sample was collected in the breathing zone during each sampling experiment. Two types of filter samples were collected, a high volume sampler and a low volume sampler. It was intended that the high volume sampler be operated at a flow rate of ~300 l/min through a 10-cm glass fiber filter (Whatman GF/C), and the low volume sampler at a flow rate of ~18 l/min through a 4.7-cm glass fiber filter (Whatman GF/C). The filters were coated with a glycerol/acetate coating to enhance collection of the enzyme protein following procedures described in Standard Operating Procedure "Filter Pad Spiking for Use with ELISA Analysis of Enzymes in Filtered Air Collections (SDA) – TX.V-003-01" (see Appendix I).

The diameters of the openings for both filter samplers were reduced, with orifices, to present the same face velocity at the target flow rates as the Aerosizer. The high volume sampler was fitted with a 3.3-cm diameter opening, and the low volume sampler was fitted with a 0.82-cm diameter opening. At the target sampling rates, the corresponding velocities were ~570 cm/sec. During actual tests, however, it was not possible to draw 300 l/min through the high volume sampler due to the high pressure drop presented by the filter coating. A maximum of only 260 l/min was achievable. Since a further reduction in sampler opening would have resulted in a greater pressure drop within the system, no further attempt was made to adjust the sampler opening. At a flow rate of 260 l/min, the corresponding face velocity was ~493 cm/sec.

The sample system was designed to allow sufficient space between the restricting orifice and the filter media for collection on the full surface of the filter media assuring low resistance to sample flow. The actual sample flow rate was measured before the start of sampling and again following the sample collection.

2.2.4 Evaluation of Filter Samples

The filters were analyzed by the ELISA method to determine the concentration of enzyme protein in the aerosol sample.

2.2.4.1 Overview

Air samples collected by filters were analyzed for airborne enzyme protein concentration by elution of the enzyme protein-containing particles from the filter into a known volume of assay buffer. The buffer-sample solution was then analyzed for enzyme protein concentration using Double-Antibody Sandwich Enzyme Linked Immunosorbant Assay (ELISA)

methodology, similar to that outlined by Miller *et al.* Concentration of the airborne enzyme protein present was then calculated by multiplying the volume of the extraction buffer used per filter by the measured enzyme protein concentration in the buffer extract, then dividing by the total air volume sampled during collection. Results are reported as nanograms of enzyme protein per cubic meter of air. ELISA analysis was performed following Battelle Standard Operating Procedures "ELISA Analysis of Enzymes in Filtered Air Collections (SDA) – TX.V-001" and "ELISA High Sensitivity Analysis of Enzymes in Filtered Air Collections (SDA) – TX.V-002-01". These procedures were validated for both the low and high volume sampling techniques using standard enzyme, antibody and antibody conjugates provided by the Sponsor. Validation included spike and recovery testing and evaluation of high-volume and low-volume blank filters taken during a spray sequence using product without enzyme following Standard Operating Procedure "Filter Pad Spiking for Use with ELISA Analysis of Enzymes in Filtered Air Collections (SDA) – TX.V-003-01". Copies of these procedures are included in Appendix I.

2.2.4.2 ELISA Standard, Antibody and Antibody Conjugate

These materials were supplied by the Sponsor in concentrated stock form with the protein concentrations specified. Using these designated concentrations, dilutions required to attain the working solutions were calculated for standards, calibrators, and spiking solutions.

2.2.4.3 Sample Preparation

Filters were extracted by placing the filter in a centrifuge tube with a known quantity of Sample Preparation Buffer (SPB) consisting approximately of 0.1% trizma base (Sigma T1503, practical grade), 0.5% sodium thiosulfate pentahydrate (Sigma S0672, reagent grade), 0.015% calcium chloride dihydrate (Sigma C5080, reagent grade), 3% sodium chloride (Fisher S271-500, reagent grade), and 0.1% BSA (Sigma A7888, RIA grade) mixed in deionized water. The tube was agitated until the pad was reduced to pulp and then centrifuged or filtered. All solutions were prepared at room temperature.

2.2.4.4 Enzyme Protein Measurement

Microtiter plates were coated with rabbit capture antibody specific for the test article enzyme following the SOP. Standards, calibrators, and sample preparations were added in quadruplicate (high sensitivity method) or duplicate (regular sensitivity method). The plate was then incubated and washed. Guinea pig detecting antibody (Novo Nordisk GP15-12196) was added to the wells followed by incubation and washing. Guinea pig peroxidase solution (Dako Corp P0141) was added followed by incubation and washing. OPD substrate solution (Sigma P4664) was then added to the wells followed by incubation and the addition of reagent grade H_2SO_4 to stop the reaction. The absorbency of the resulting color change was measured at 490/630 nanometers using an automatic plate reader (Dynex MRX Microplate Reader, Dynex Technologies, Inc., Chantilly, VA). A calibration curve was created using the concentrations of standard enzyme protein. The concentration of enzyme protein present in the sample was determined from the standard curve. The final conversion of protein in the aerosol sample was calculated from the formula:

$$ng/m^3 = \frac{(ng/ml) * (ml\ used\ to\ extract\ fluid) * (dilution\ factor)}{Air\ sample\ volume\ in\ m^3}$$

2.2.5 Experimental Design

Room air flow, temperature and humidity values within the experimental test chamber were monitored during the test runs. The flow of air within the chamber was minimized during tests by closing the door and turning off the HVAC and recirculation filter system. The relative humidity within the chamber was maintained between 25 and 50 percent and the temperature between 70 and 85°F (data included in Appendix A).

Aerosizer sampling was begun 1 minute before starting the first spray application to establish the background aerosol level. Sampling continued through the spray sequence, at approximately 33-second intervals (30 seconds for sampling, 3 seconds for data processing), and for an additional 10 minutes after spraying cessation. The total sampling time was approximately 13 minutes.

Filter sampling was also begun 1 minute before starting the first spray application and continued for an additional 10 minutes after spraying cessation. Affect of both the high and low sample airflow through the filter on the Aerosizer sampling results was determined by running one set of replicates without drawing air through the filter. The total sampling time was approximately thirteen minutes, equivalent to the period of time that the Aerosizer sampled.

Prior to each product evaluation procedure (i.e., high and low volume sampling procedures), a control evaluation procedure was performed, without spraying the product, to investigate the control conditions. The control test procedures were run identically to the product evaluation procedures with the exception that no product was placed in the sprayer. This established the baseline conditions for the Aerosizer.

Five replicates of the product evaluation procedure were run, i.e., five runs using high volume sampling and five runs using low volume sampling.

The spray sequence was conducted by first purging the test chamber with HEPA-filtered air for five minutes, turning off the HEPA filter system air and measuring room background for five minutes using the Aerosizer. Following background sampling, the Aerosizer and high, or low, volume filter sampling system were simultaneously initiated. After one minute had elapsed, the technician began the spray sequence by applying a uniform force to the spray trigger to deliver five sprays to the target at the rate of one stroke per second. The target was then removed to a plastic tray, ten seconds allowed to elapse, and the procedure repeated until all six targets were sprayed. The spray sequence was completed in about 80 seconds. The Aerosizer and filter samples continued to sample test chamber air for the remainder of the sampling period. The total elapsed period of sampling was about 13 minutes.

During sampling, the chamber had no air movement other than that created by drawing the samples and that created by the cooling fans associated with the computer system and Aerosizer. Between experimental runs the chamber was flushed with fresh HEPA-filtered air for a sufficient time to rid the simulated breathing zone of any residual particles and vapors. Verification of removal of aerosols was conducted prior to the start of the test by sampling with the Aerosizer.

Verification that the flush system cleared the chamber of enzyme aerosol (designated Verify Flush System – VFS) was accomplished by collecting filter samples before a test spray sequence, during the test spray sequence (with enzyme product) and immediately following the flushing period. These tests were performed with both high and low volume filter samples. The sample volume collected and the collection time were the same for samples taken before and during the test spray sequence and following the flushing period.

Data from high- and low-volume flow filter sampling and the Aerosizer were used to generate time-resolved enzyme protein concentration profiles. These profiles, one for low-volume sampling and one for high-volume sampling, were obtained by plotting the time-resolved relative aerosol concentration to which a correction factor had been applied. The correction factor was derived by dividing the enzyme protein content/liter sampled on the filter by the relative total mass/liter sampled by the Aerosizer.

Specific testing tasks, and the naming convention used to identify these tests, are shown in Table 2.2.

Table 2.2 SDA Phase II Tests

Tasks/Subtasks	Filters	Targets
1. Setup and Pretesting		
a. Retest spray trigger #4 (spray pattern and mass output)	0	1
b. Retest spray trigger #5 (spray pattern and mass output)	0	1
2. Validation of ELISA Method		
a. Spike and recovery (high volume, no sample flow)	3	0
b. Spike and recovery (low volume, no sample flow)	3	0
c. High Volume Evaluation Procedure – HVEP (product w/ enzyme)	1 (10cm)	6
d. Low Volume Evaluation Procedure – LVEP (product w/ enzyme)	1 (4.7cm)	6
e. High Volume Blank Replicate – HVEPBR (product w/o enzyme)	1 (10cm)	6
f. Low Volume Blank Replicate – LVEPBR (product w/o enzyme)	1 (4.7cm)	6
3. ELISA Evaluation of Test Article		
a. High Volume Control Evaluation Procedure – HVCEP (no product in sprayer)	1 (10cm, no analysis)	6
b. Low Volume Control Evaluation Procedure – LVCEP (no product in sprayer)	1 (4.7cm, no analysis)	6
c. Verify Flushing System (1 spray sequence w/ enzyme product & ELISA)		
• High Volume Test – HVVFS-B,-D,-A (before, during, and after – all sampling times equal)	3 (10cm)	6
• Low Volume Test – LVVFS-B,-D,-A (before, during, and after – all sampling times equal)	3 (4.7cm)	6
d. High Volume Product Evaluation Procedure – HVPEP		
• Control – HVPEP-Control	1 (10cm)	6
• Replicate 1 – HVPEP-1	1 (10cm)	6
• Replicate 2 – HVPEP-2	1 (10cm)	6
• Replicate 3 – HVPEP-3	1 (10cm)	6
• Replicate 4 – HVPEP-4	1 (10cm)	6
• Replicate 5 – HVPEP-5	1 (10cm)	6
e. Low Volume Product Evaluation Procedure – LVPEP		
• Control – LVPEP-Control	1 (4.7cm)	6
• Replicate 1 – LVPEP-1	1 (4.7cm)	6
• Replicate 2 – LVPEP-2	1 (4.7cm)	6
• Replicate 3 – LVPEP-3	1 (4.7cm)	6
• Replicate 4 – LVPEP-4	1 (4.7cm)	6
• Replicate 5 – LVPEP-5	1 (4.7cm)	6

3.0 STATISTICAL METHODS AND DATA CALCULATIONS

3.1 Statistical Methods

The average value (mean) and standard deviation (SD) of the experimental data were calculated according to the following equations:

$$\text{Mean} = \frac{\sum x}{n}, \tag{1}$$

$$\text{SD} = \sqrt{\frac{n\sum x^2 - \left(\sum x\right)^2}{n(n-1)}}. \tag{2}$$

3.2. Particle Size Calculations

The particle size distribution measured by API Aerosizer is represented by the aerodynamic mass median diameter (MMAD) and the geometric standard deviation (GSD). The MMAD is the diameter of the unit density particle that has the same setting velocity as the particle in question. Mass median diameter (MMD) is defined as the diameter at which 50% of the sample is smaller and 50% is larger than the MMD, and is expressed as d (v, 50). The relationship between the MMD and the MMAD can be expressed as

$$\text{MMAD} = \text{MMD}\sqrt{\rho}$$

where ρ is the density of the particle, which was assumed to be 1.0 g/cm^3 for this study.

Assuming a lognormal distribution for the aerosol, the geometric standard deviation (GSD) can be expressed by:

$$\text{GSD} = \frac{d(v,84.1)}{d(v,50)}$$

where the d(v, 84.1) is the mass median diameter at which 84.1% of the sample is smaller than the indicated diameter.

4.0 RESULTS AND DISCUSSIONS

4.1 Spray Pattern and Mass Balance from Trigger Sprayers #4 and #5

Spray pattern and mass balance results for trigger sprayers #4 and #5 are shown in Table 4.1. For comparison, the results obtained during Phase I testing are also presented.

Table 4.1 Spray Pattern and Mass Balance Results for Trigger Sprayers #4 and #5. The vertical orientation was used for these tests.

Measure-ment ID	Trigger Sprayer	Net loss from container (g)	Net gain on fabric (g)	%MD[a]	Circular diameter (mm)	Shape of pattern
Phase I	Sprayer 4	4.3	4.3	0.00	17.0	circle
		4.1	4.1	0.00	18.5	circle
		4.1	4.0	2.44	17.5	circle
	Mean (SD)	**4.2 (0.1)**	**4.1 (0.2)**	**0.81 (1.4)**	**17.7 (0.8)**	
Phase II	Sprayer 4	4.9	4.5	8.16	17.0	circle
		4.8	4.6	4.17	16.5	oval
		4.8	4.6	4.17	18.0	circle
	Mean (SD)	**4.8 (0.1)**	**4.6 (0.1)**	**5.50 (2.3)**	**17.2 (0.8)**	
Phase I	Sprayer 5	4.0	4.1	0.00	18.0	circle
		4.2	4.1	2.38	17.5	circle
		4.0	3.9	2.50	17.5	circle
	Mean (SD)	**4.1 (0.1)**	**4.1 (0.2)**	**1.63 (1.4)**	**17.7 (0.3)**	
Phase II	Sprayer 5	4.2	4.2	0.00	21.0	circle
		4.5	4.1	8.89	21.0	circle
		4.4	4.1	6.82	22.0	circle
	Mean (SD)	**4.4 (0.2)**	**4.1 (0.1)**	**5.24 (4.7)**	**21.3 (0.6)**	

[a]%MD (Percent of Mass Difference) = (Net loss from the container-Net gain on the fabric) x100%/Net loss from the container.

Although the mass output from trigger sprayer #4 appears to have increased ~14% between Phase I and Phase II, it was decided to continue use of this trigger sprayer based on spray pattern. A different individual performed the spray actuations during Phase I and Phase II tests which may account for the difference in output.

4.2 Validation of the ELISA Method - Spike and Recovery

For the spike and recovery tests, a known mass of enzyme protein was placed on either 10-cm or 47-mm filter pads that were then pulped with a known volume of buffer solution, and analyzed via the ELISA method. A standard solution, referred to as Calibrator, was prepared from known quantities of enzyme stock solution and sample preparation buffer. A high

sensitivity analytical method was used to determine enzyme protein content on the 47-mm filters, and a regular sensitivity analytical method was used to determine enzyme protein content on the 10-cm filters. The high sensitivity solution administered to the filters contained 100 ng of crystalline enzyme per ml of buffer and the regular sensitivity solution contained 2000 ng crystalline enzyme per ml of buffer. No air flow was directed through the filters for these tests.

The results of spike and recovery tests are presented in Table 2.2. Mean recovery efficiencies exceeded 95% for the calibrator, and equaled 97% for the high sensitivity method, and 91% for the regular sensitivity method, values considered acceptable for meaningful tests.

Table 4.2 Spike and Recovery Results for High Sensitivity ELISA Analytical Method and Regular Sensitivity ELISA Analytical Method.

Method	Source	Spiked Concentration	Recovered Concentration	% Recovery
High Sensitivity (47-mm filters)	Calibrator 1	500 pg/ml	480 pg/ml	96
	Calibrator 2	500 pg/ml	482 pg/ml	96
			Mean =	**96**
	47 mm Pad Spike 1	500 pg/ml	492 pg/ml	98
	47 mm Pad Spike 2	500 pg/ml	514 pg/ml	103
	47 mm Pad Spike 3	500 pg/ml	449 pg/ml	90
			Mean =	**97**
Regular sensitivity (10-cm filters)	Calibrator 1	4 ng/ml	3.8 ng/ml	95
	Calibrator 2	4 ng/ml	4.1 ng/ml	103
	Calibrator 3	4 ng/ml	3.8 ng/ml	95
			Mean =	**98**
	10 cm Pad Spike 1	4 ng/ml	3.8 ng/ml	95
	10 cm Pad Spike 2	4 ng/ml	3.5 ng/ml	88
	10 cm Pad Spike 3	4 ng/ml	3.6 ng/ml	90
			Mean =	**91**

4.3 Results of Aerosol Mass and Particle Size Distribution Measurements

The experimental data are presented according to their Test Identification presented in Table 2.2.

4.3.1 Control Evaluation Procedure – High and Low Volumetric Sampling Rates

The control evaluation procedures were conducted identically to the product evaluation procedures with the exception that no product was placed in the sprayer. This established the baseline conditions for the Aerosizer.

Aerosol concentration data for the control evaluation test are presented graphically in Figure 4.1. The Aerosizer measurement period was set for 30 seconds (with about a 3-second delay between runs for data processing), and measured the aerosol continuously for about 13 minutes. The simulated spray episode, without product in the sprayer, started 1 minute after the beginning of the Aerosizer sampling. As can be seen from the figure, the relative aerosol mass concentration rose gradually during the sampling episode, probably as a result of personnel movement inside the booth. Concentrations remained quite low, $<1.5 \times 10^{-3}$ mg/m^3, for the duration of the test at high and low volumetric sampling rates.

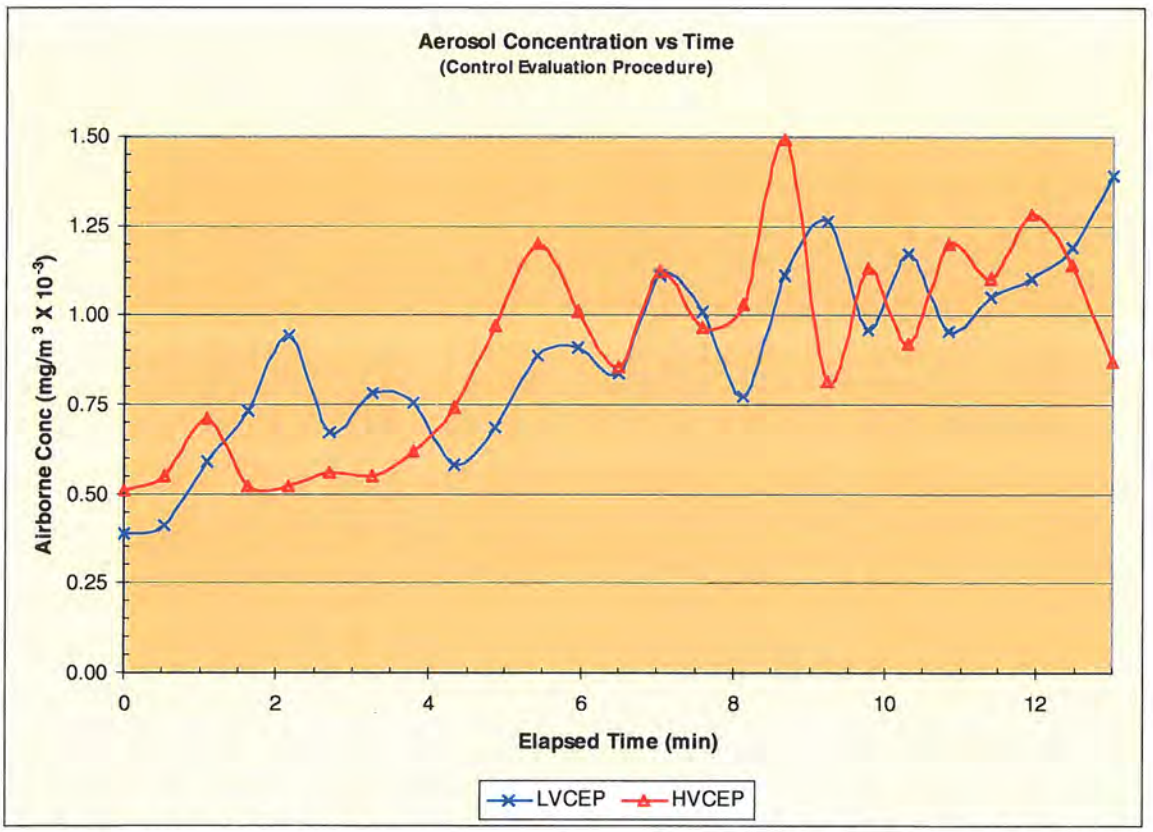

Figure 4.1 Relative Aerosol Mass Concentration as a Function of Time for the Control Evaluation Procedure with No Product in the Sprayer.

The aerosol size distribution as a function of time after the simulated spray episode is shown in Figure 4.2. The size distribution measurements were taken at the same time as the mass concentration measurements. Each data point presented in Figure 4.2 corresponds to a data point shown in Figure 4.1. No increase in the mass median aerodynamic diameter during the spraying event is evident.

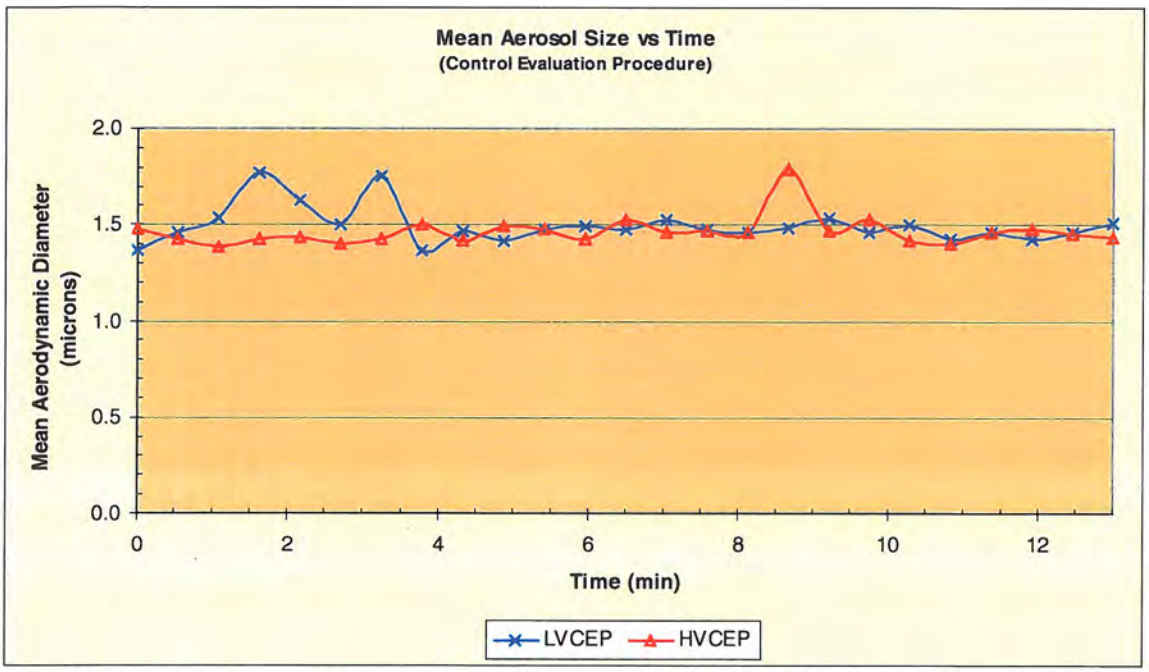

Figure 4.2 Mean Aerosol Size as a Function of Time for the Control Evaluation Procedure with No Product in the Container.

4.3.2 Verification of Booth Aerosol Flushing System – High and Low Volumetric Sampling Rates

Aerosol concentration data for the booth aerosol-flushing verification test are presented graphically in Figure 4.3. The Aerosizer measurement period was set for 30 seconds, and measured the aerosol continuously for about 12 minutes. The spray episode started 1 minute after the beginning of the Aerosizer sampling. High- or low-volume filter sampling was conducted simultaneously with the initiation of spraying and API data collection.

As Figure 4.3 shows, aerosol concentrations returned to pre-spraying levels after actuation of the chamber flushing system.

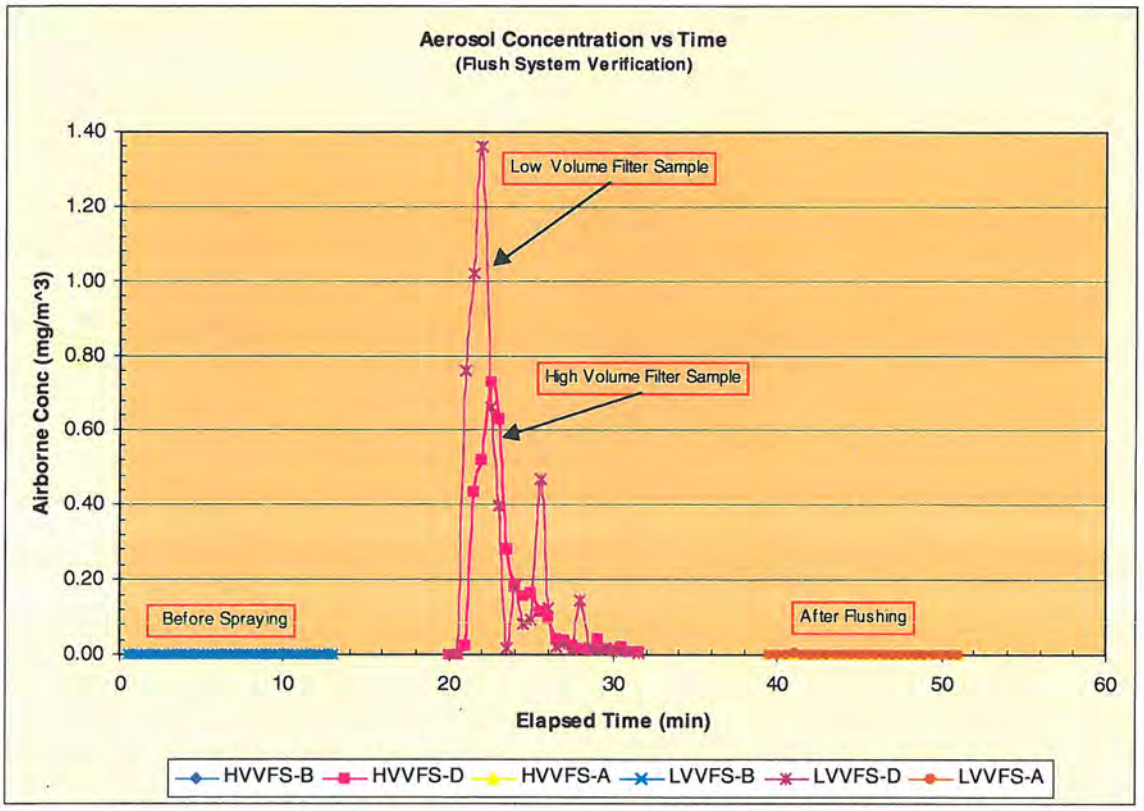

Figure 4.3 Results of the Chamber Flushing System Verification Tests. As indicated in the graphic, post-spray aerosol concentration returned to pre-spray levels after the flush system was actuated. Values are relative mass units derived from Aerosizer data.

Results of enzyme protein concentration determination for filter samples via ELISA analyses compared to the average chamber aerosol concentration derived from Aerosizer data during the spray event are shown in Table 4.2. Note that the average chamber aerosol concentration was determined by averaging the results of Aerosizer data collected in 30-second intervals for the duration of the sampling period coinciding with the collection of filter samples.

Table 4.3 Results of Enzyme Protein Concentration Determination by ELISA Analyses of Filters and Average Chamber Aerosol Concentration Determination using the API Aerosizer for the Verification of Flushing System Test (VFS).

Test ID	HVVFS-B	HVVFS-D	HVVFS-A	LVVFS-B	LVVFS-D	LVVFS-A	Units
Enzyme Protein Concentration	0	161	1	4	186	12	ng/m^3
Relative Aerosol Concentration	463	163,146	577	499	248,533	649	ng/m^3

Key: HV = High Volume (sample flow rate), LV = Low Volume (sample flow rate), VFS = Verification of Flushing System, B = Before (spray event), D = During (spray event), A = After (following activation of the booth air-recirculating system designed to remove aerosol)

Detectable protein and aerosol concentrations preceding the spray event were quite low and were comparable for both the high volume and low volume sampling methods. During the spray event, elevated enzyme and aerosol concentrations were detected, as expected. Airborne enzyme and aerosol concentrations returned to near pre-spray levels after actuation of the booth air filtration system.

4.3.3 Product Evaluation Procedure – High Volumetric Sampling Rate

Results of the product evaluation procedure with simultaneous filter sampling at high volumetric flow rates (~260 lpm) are shown in Figures 4.4 and 4.5 and Table 4.3. The relative mass concentration measured by the Aerosizer increased immediately from the background level after spraying, and then gradually decreased to the background level. The relative mass concentration during the background check was maintained close to zero and the peak of the average mass concentration was about 0.64 mg/m^3 as determined from Aerosizer data.

There were two decay rates for the aerosol mass concentration after spraying. One was the rapid decay rate that took about two minutes followed by a slow decay rate that reduced the mass concentration to near background level.

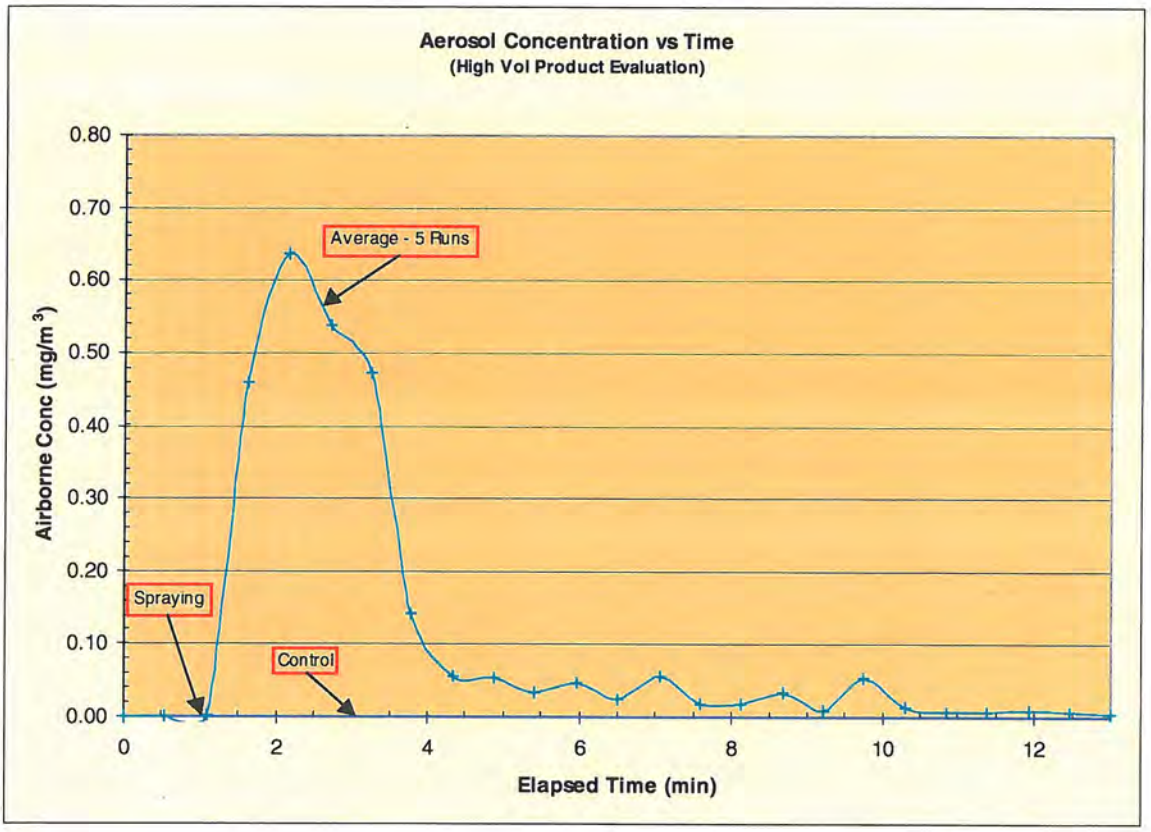

Figure 4.4 Aerosol Concentration versus Time for the Average of Five Replicate High Volume Sample Runs. API sampling was conducted simultaneously with the collection of filter samples at high volumetric flow rates.

Figure 4.5 presents the predicted enzyme concentration-time profile. This profile was obtained by plotting the result of applying the ratio of mean aerosol enzyme protein concentration (derived from filter samples) to mean aerosol concentration (derived from Aerosizer data) and the time-resolved aerosol concentration data shown in Figure 4.4, i.e., Instantaneous Airborne Enzyme Protein Concentration = (enzyme protein

concentration via filters/average aerosol concentration via Aerosizer) X (instantaneous aerosol concentration via Aerosizer). Figure 4.5 indicates a predicted maximal airborne enzyme protein concentration of ~395 ng/m^3 during the spray event. Note that the plotted results are based on the assumption that enzyme protein content of the aerosol remains constant during the sampling period.

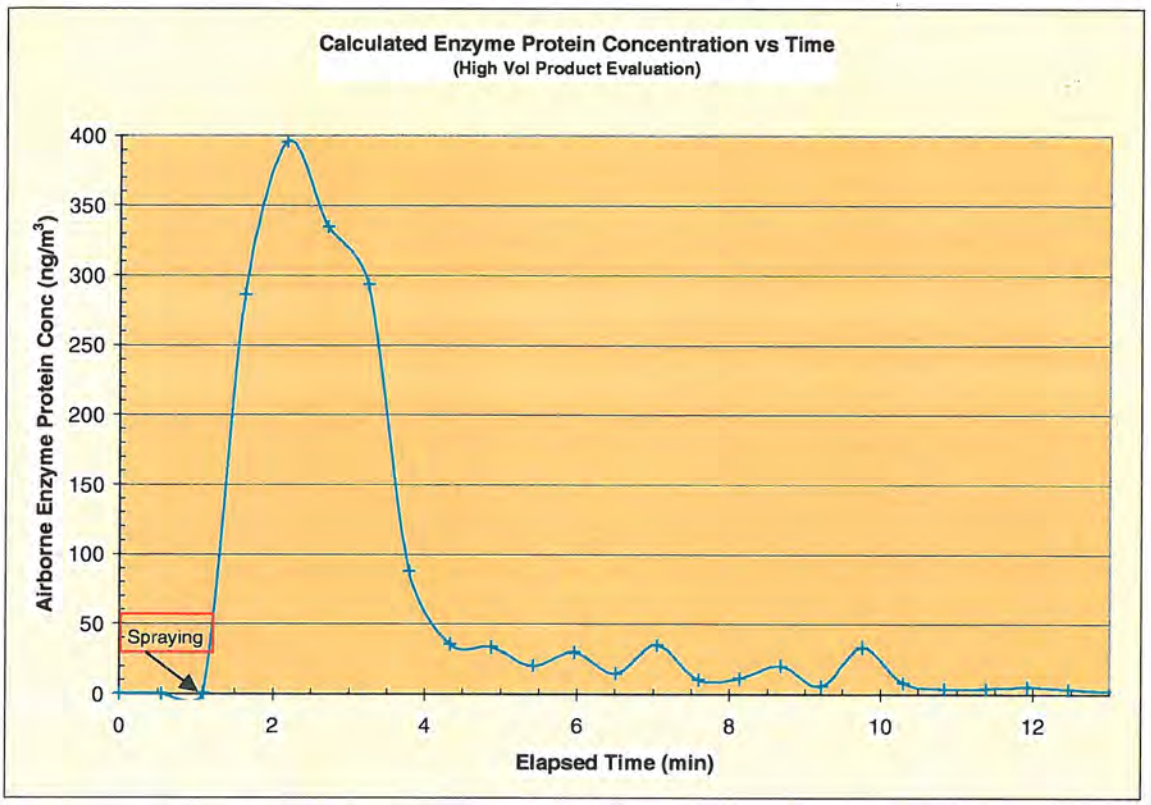

Figure 4.5 Calculated Enzyme Protein Concentration versus Time Profile of High Volume Samples. The profile was determined by applying the results of enzyme protein filter sample analyses to Aerosizer data shown in Figure 4.4 and assumes that the enzyme protein content of the aerosol remains constant during the sampling period.

Table 4.3 shows that the time-weighted average enzyme protein concentration during the spray event, as determined by ELISA analyses of high volumetric flow rate filter samples ranged from 45 to 78 ng/m^3 with the average enzyme protein concentration equal to 67 ng/m^3. Note that the regular sensitivity ELISA method was used to determine filter enzyme protein content since enough material was collected to achieve satisfactory results. Table 4.3 also presents the predicted maximal enzyme protein concentrations determined by applying the ratio of mean aerosol enzyme protein concentration (derived from filter samples) to mean aerosol concentration (derived from Aerosizer data) and the time-resolved aerosol concentration data for each test run. The predicted maximal enzyme protein concentrations ranged from 362 ng/m^3 to 633 ng/m^3, with the average maximal enzyme protein concentration equal to 396 ng/m^3.

Table 4.4 Mean Enzyme Protein Concentration Determination by ELISA Analyses and Predicted Maximal Airborne Enzyme Protein Concentration Obtained by Applying Relative Mass Loading Ratios to Filter Results for the High Volume Product Evaluation Procedure.

Test ID	HVPEP Control	HVPEP Rep 1	HVPEP Rep 2	HVPEP Rep 3	HVPEP Rep 4	HVPEP Rep 5	Overall Average	Units
Mean Enzyme Protein Concentration	0	45	75	66	78	68	67	ng/m^3
Predicted Maximal Enzyme Protein Concentration	0	362	633	589	495	561	396	ng/m^3

Key: HV = High Volume (sampling rate), PEP = Product Evaluation Procedure

The mean aerosol aerodynamic diameter during the spray event, determined from five replicate runs, is displayed in Figure 4.6. Mean size rose sharply after spraying began, and for about 2 minutes following, reaching a maximum at ~13 µm, then steadily declined for the remaining sampling period.

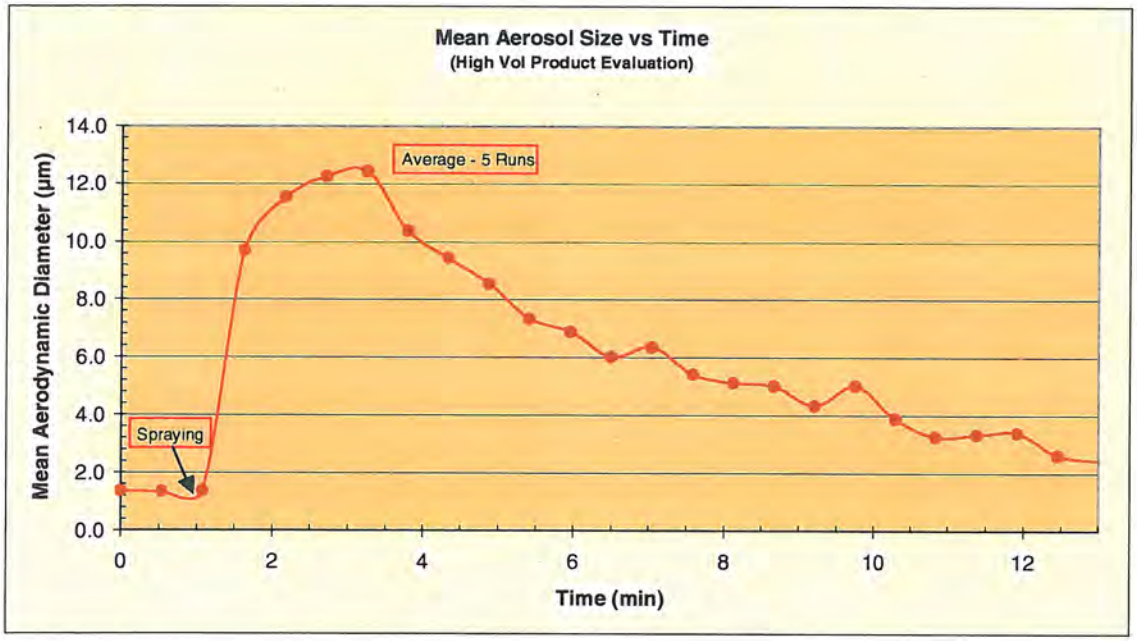

Figure 4.6 Mean Aerosol Size versus Time for the Average of Five Replicate Runs at High Volumetric Filter Sample Flow Rates.

4.3.4 Product Evaluation Procedure – Low Volumetric Sampling Rate

Results of the product evaluation procedure with simultaneous filter sampling at low volumetric flow rates (~18 lpm) are shown in Figures 4.7, 4.8 and 4.9 and Table 4.4. Again the relative mass concentration measured by the Aerosizer increased immediately from the background level after spraying, and then gradually decreased to the background level. The

mass concentration level during the background check was maintained close to zero and the peak of the average relative mass concentration loading was about 0.17 mg/m^3 as determined from Aerosizer data.

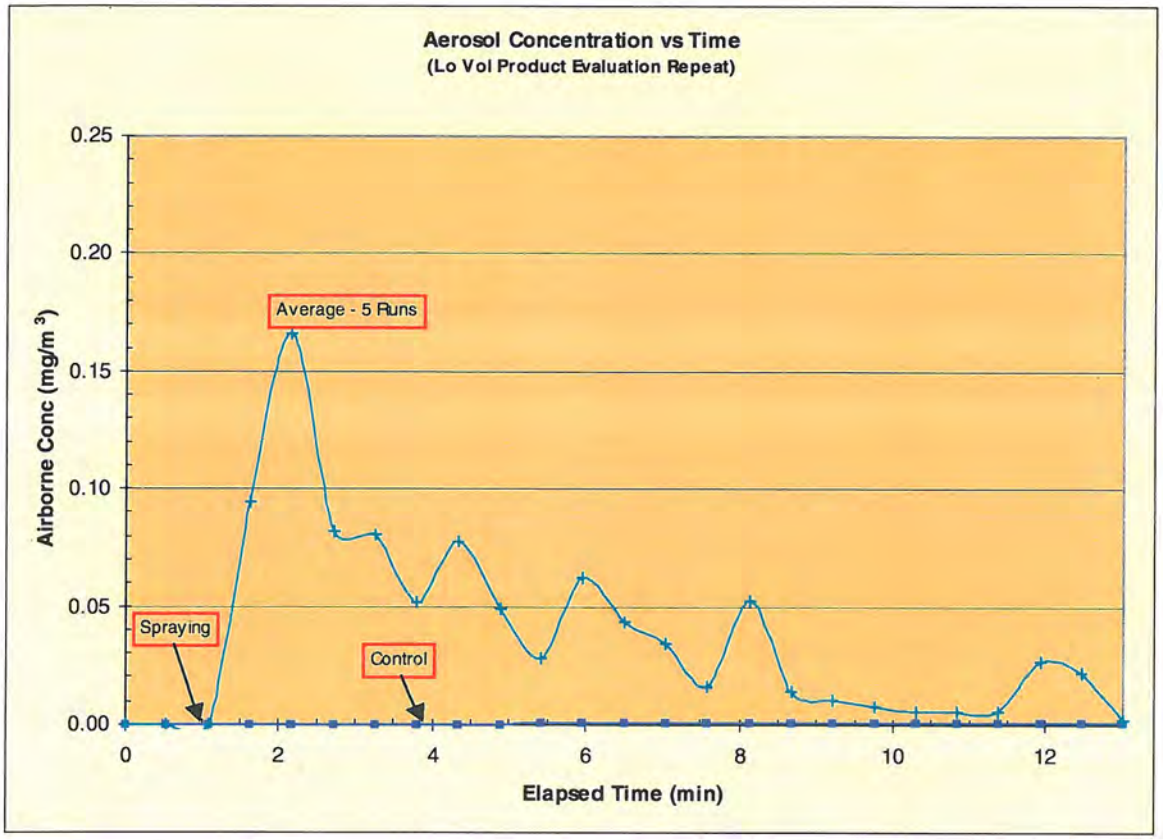

Figure 4.7 Aerosol Mass Concentration versus Time for the Average of Five Replicate Low Volume Sample Runs. API sampling was conducted simultaneously with the collection of filter samples at low volumetric flow rates.

Figure 4.8 presents the predicted enzyme protein concentration-time profile. This profile was obtained by plotting the result of applying the ratio of mean aerosol enzyme protein concentration (derived from filter samples) to mean aerosol concentration (derived from Aerosizer data) and the time-resolved aerosol concentration data shown in Figure 4.7. That is, the Instantaneous Airborne Enzyme Protein Concentration = (enzyme protein concentration via filters/average aerosol concentration via Aerosizer) X (instantaneous aerosol concentration via Aerosizer). The plot assumes that enzyme protein content within the aerosol remains constant for the duration of the sampling period. Figure 4.8 indicates a predicted maximal airborne enzyme protein concentration of ~520 ng/m^3 during the spray event. Note that the resultant curve is based on the assumption that the enzyme protein content of the aerosol remains constant during the sampling period.

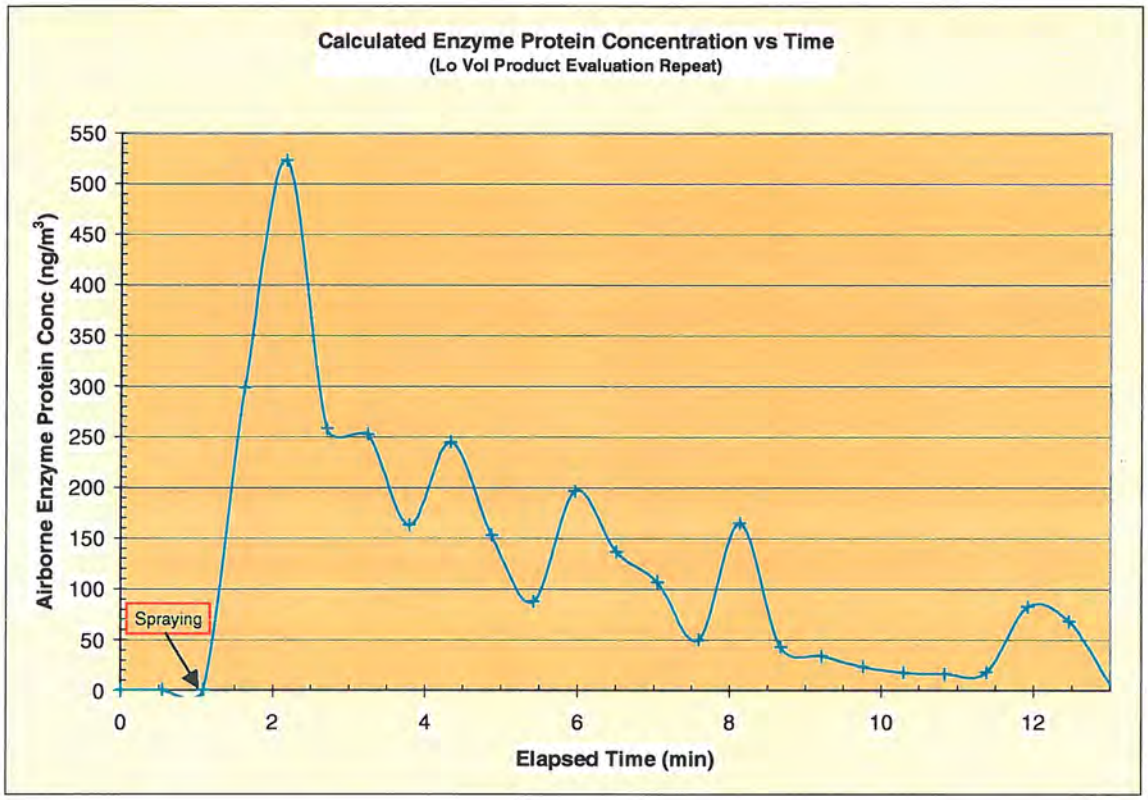

Figure 4.8 Calculated Enzyme Protein Concentration versus Time Profile of Low Volume Samples. The profile was determined by applying the results of enzyme protein filter sample analyses to Aerosizer data shown in Figure 4.7 and assumes that the enzyme protein content of the aerosol remains constant during the sampling period.

Table 4.4 shows that the time-weighted average enzyme protein concentration during the spray event, as determined by ELISA analyses of low volumetric flow rate filter samples ranged from 102 to 140 ng/m^3, with an average enzyme protein concentration equal to 121 ng/m^3. Note that the regular sensitivity ELISA method was used to determine filter enzyme protein content, since enough material was deposited to allow satisfactory analysis. Table 4.4 also presents the predicted maximal enzyme protein concentrations determined by applying the ratio of mean aerosol enzyme protein concentration (derived from filter samples) to mean aerosol concentration (derived from Aerosizer data) and the time-resolved aerosol concentration data for each test run. The predicted maximal enzyme protein concentrations ranged from 449 to 1245 ng/m^3, with an average of 523 ng/m^3. The ELISA results exceeded values obtained during the high volume product evaluation procedure discussed above. As discussed previously, this test was repeated due to inconclusive results and a slightly different spray nozzle was used during this repeated trial. This may explain some of the disparity in results between high volume and low volume sampling methods.

Table 4.5 Mean Enzyme Protein Concentration Determination by ELISA Analyses and Predicted Maximal Airborne Enzyme Protein Concentration Obtained by Applying Relative Mass Loading Ratios to Filter Results for the Low Volume Product Evaluation Procedure.

Test ID	LVPEP Control	LVPEP Rep 1	LVPEP Rep 2	LVPEP Rep 3	LVPEP Rep 4	LVPEP Rep 5	LVPEP Average	Units
Mean Enzyme Protein Concentration	0	140	128	102	117	117	121	ng/m^3
Maximal Enzyme Protein Concentration	0	1245	573	449	888	741	523	ng/m^3

Key: LV = Low Volume (sampling rate), PEP = Product Evaluation Procedure

Mean aerosol size during the spray event is displayed in Figure 4.9. Mean size rose sharply after spraying began, plateaued at about 9 µm for about 2 minutes following, then steadily declined for the remaining sampling period.

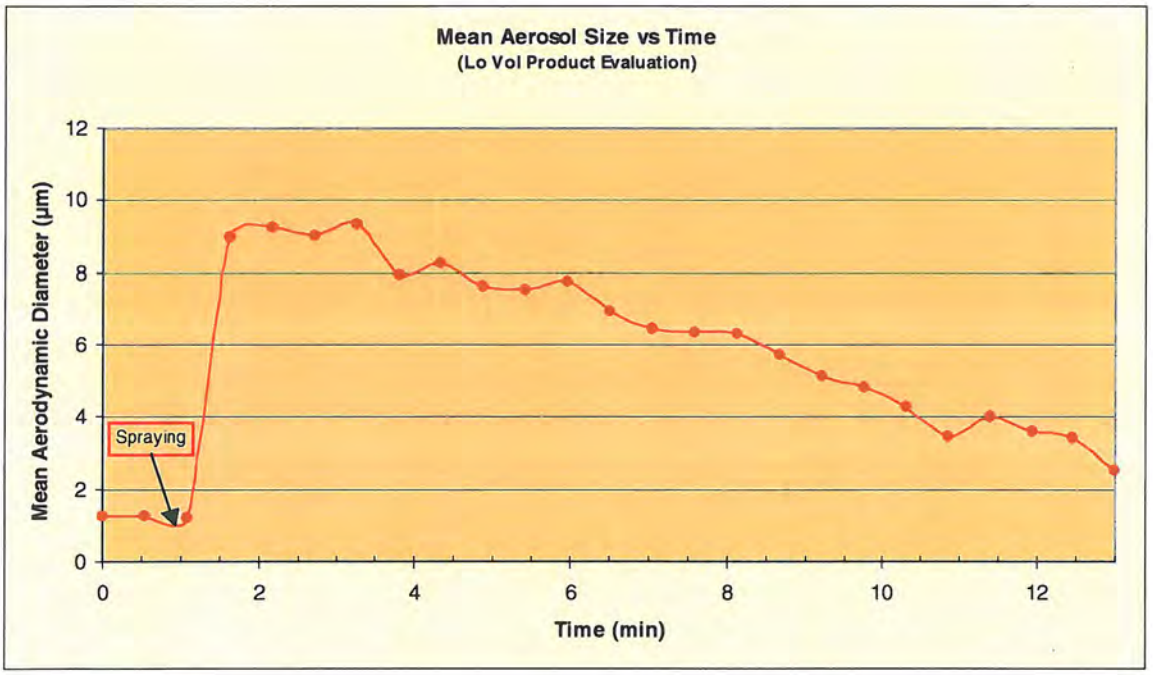

Figure 4.9 Mean Aerosol Size versus Time for the Average of Five Replicate Runs at Low Volumetric Filter Sample Flow Rates.

5.0 Summary

This study evaluated the time profile of the particle size distribution and relative mass of aerosols near the breathing zone of a potential user resulting from the spray delivery of an SDA Generic Laundry Spray Detergent (formulation 14979-H-4-4). Test article with the addition of 0.5% Savinase 16.0L EX (manufactured by Novo Nordisk) was tested using a vertical fabric target. The spray nozzle was 6 inches from the fabric target. The fabric targets were 18-inch square desized 65/35 Khaki cotton/polyester blend backed with plastic-backed absorbent paper. The test article was sprayed from a Calmar Dispensing Systems, Inc. Standard TS800 trigger sprayer.

The breathing zone tests were conducted with test article (lot number 14979-H-4-47-2) containing Savinase 16.0L EX. With the exception of the final test, the low volume product evaluation procedure, the same spray trigger was used for each test. Each test was repeated 5 times. Each breathing zone test consisted of a manually controlled actuation sequence of five sprays at a rate of one spray per second repeated six times per cloth target with a 10-second lag between targets (a total of 35 sprays per target over a period of approximately 80 seconds). Aerosol measurements were made using an API Model LD Aerosizer. Aerosol measurements began one minute prior to the actuation sequence to measure the background and continued for ~12 minutes (total sampling period = 13 minutes) following the actuation sequence to measure the time course of the aerosol concentration and particle size distribution. The Aerosizer was used to determine relative aerosol mass concentration profiles for the duration of the 13-minute trials. Data from the Aerosizer was then used to determine the predicted enzyme protein concentration time-resolved profile based on filter sample analyses.

Simultaneously with the collection of Aerosizer data, filter samples were taken at high or low volumetric flow rates. These filters were analyzed for enzyme protein content using the ELISA procedure. The total mass lost from the spray trigger and the total mass deposited on the cloth targets were also measured during each actuation sequence.

The spray trigger chosen for the majority of tests was the same trigger used during Phase I testing, trigger #4. The trigger had a circular spray pattern with an approximate diameter of 17 mm from a nozzle to target distance of 6 inches. The average output of the spray trigger was 4.8 grams. For the final test, the low volume product evaluation procedure, spray trigger #5 with similar spray characteristics was substituted. This trigger had a spray circular pattern with a diameter of ~21 mm. Average output was measured at 4.4 grams. This trigger assembly was used when it became necessary to repeat the low volume product evaluation procedure because of apparent nozzle failure manifested by material spillage down the exterior of the spray container, and resultant inconclusive data.

During the control evaluation procedure with no product in the sprayer, booth aerosol concentrations remained low during the spray event – less than 1.5×10^{-3} mg/m^3. The mean aerosol aerodynamic diameter measured during the spray event remained reasonably constant at 1.5 μm.

That the testing booth HEPA filtration system performed as designed was confirmed at both high and low sampling rates. Aerosizer sampling data and ELISA analyses of filter samples showed low aerosol and enzyme protein concentrations preceding the spray event and substantially elevated aerosol and airborne enzyme protein concentrations during the spray event. After activation of the booth air filtration system, background aerosol and enzyme protein concentrations returned to near pre-spray levels.

Spray tests were performed while filter sampling at high volumetric flow rates, ~260 lpm. Though this flow rate was below the target rate of 300 lpm, it was the highest achievable because of the high pressure drop presented by the coated 10 cm filter. The results indicated an average airborne enzyme protein concentration (five replications) of 67 ng/m^3 based on filter samples. The maximal predicted enzyme protein concentrations, based on relative mass loading derived from Aerosizer data and filter analyses ranged from 362 to 633 ng/m^3, with an average maximal concentration of 396 ng/m^3. The mean aerosol aerodynamic diameter rose sharply after spraying began, and for about two minutes following, reaching a maximum of ~13 µm, then steadily declined through the remaining sampling period. Results of the high volume product evaluation tests are summarized in Table 5.1.

Spray tests were also performed while filter sampling at low volumetric flow rates, ~18 lpm. The results indicated an average airborne enzyme protein concentration (five replications) of 121 ng/m^3. The maximal predicted enzyme protein concentrations, based on relative mass loading derived from Aerosizer data and filter analyses ranged from 449 to 1245 ng/m^3, with an average maximal concentration of 523 ng/m^3. The mean aerosol aerodynamic diameter rose sharply after spraying began, and plateaued at ~9 µm for about two minutes following, then steadily declined through the remaining sampling period. Results of the low volume product evaluation tests are summarized in Table 5.1.

The reasons for the discrepancies in results between the high volume product evaluation procedure and low volume product evaluation procedure may be due to the use of a different spray trigger and different flow rates used to draw aerosol through the filters. Though the sample face velocities were intended to be identical for both test procedures, it was not practical due to the high pressure drop across the 10-cm filter presented by the coating.

As shown by test run summaries displayed in Table 5.1, between run variability in predicted maximal enzyme protein concentrations for each sample procedure was quite large, exceeding 100% in some cases. Since these values are derived from Aerosizer data, the results demonstrate either inconsistent generation or measurement during the spray events. The problem of consistent aerosol generation was addressed, if not resolved, by using the same individual to perform all spray actuations for all test procedures. The contribution of subtle air currents within the test chamber is unknown.

For comparison, results obtained at Battelle Toxicology Northwest during Phase I testing using the Aerosizer gave peak aerosol concentrations between 0.4 and 0.8 mg/m^3 for different trials of two containers. This compares favorably to the results obtained during the high volume product evaluation test performed during Phase II, which used the same spray trigger. Average aerosol concentrations for the duration of the sampling periods were not presented

for Phase I data. Aerosol MMADs to 10 µm were reported. No enzyme protein analyses were performed.

Table 5.1 Summary of High and Low Volume Product Evaluation Procedure Results and Sampling Parameters.

	High Volume Test Method	**Low Volume Test Method**
Measured Average Airborne Enzyme Protein Concentration (ng/m^3) via ELISA Analyses		
Run 1	45	140
Run 2	75	128
Run 3	66	101
Run 4	78	117
Run 5	68	117
Average 5 Runs	67	121
Predicted Maximal Airborne Enzyme Protein Concentration (ng/m^3)		
Run 1	362	1245
Run 2	633	573
Run 3	589	449
Run 4	495	888
Run 5	561	741
Average 5 Runs*	396	523
Maximal Mean Particle Diameter (µm)		
Run 1	14	9
Run 2	12	10
Run 3	15	10
Run 4	13	10
Run 5	12	9
Average 5 Runs**	12	9
Filter Diameter (cm)	10	4.7
Filter Sample Aperture (cm)	3.34	0.82
Filter Sample Flow Rate (lpm)	260 (Target 300)	18 (Target 18)
Average Face Velocity (cm/sec)	495	570

* Determined by applying the average enzyme protein mass to total aerosol mass ratio to the average maximal aerosol concentration from Aerosizer data for all 5 replicate runs

** Determined by averaging Aerosizer data for identical sampling intervals for all 5 replicate runs.

6.0 ACKNOWLEDGEMENTS

Members of Battelle's research staff whose signatures appear in the report or in the study records are acknowledged for their participation in the conduct of this study. The names of the principal contributors in this study are listed below:

Participant	Title
J. R. Decker, Jr., B.S.	Study Director, Richland
M. L. Clark, M.S.E.	Senior Research Scientist
K. H. Debban	Researcher
W. C. Forsythe	Researcher
C. K. Simmons	Technician

Appendix A. Experimental Raw Data Summaries

Study: SDA Phase 2
Study #: N003043B

Date: 4/22/99
Initial:

High volume Replicate 1

10 cm filters pulped with 25 mL buffer. Values below not corrected for dilution.
10 cm filters spiked or collected 4/21/99, dried 1 hour, placed into 50 mL centrifuge tubes
All 10 cm filters diluted with 25 mL buffer, shaken/rotated ~1 hour, filtered

	Results
Calibrator, 4 ng/mL	3.84 ng/mL
	4.06 ng/mL
	3.85 ng/mL
	3.92 Mean
	0.12 SD
Filter Spike 1, 4 ng/m	3.75 ng/mL
	3.76 ng/mL
	3.69 ng/mL
	3.73 Mean
	0.04 SD
Filter Spike 2, 4 ng/m	3.63 ng/mL
	3.45 ng/mL
	3.46 ng/mL
	3.56 ng/mL
	3.49 ng/mL
	3.64 ng/mL
	3.54 Mean
	0.08 SD
Filter Spike 3, 4 ng/m	3.17 ng/mL
	3.83 ng/mL
	3.83 ng/mL
	3.61 Mean
	0.38 SD
Filters, combined	3.61 Mean
	0.19 SD

Filters: 90.25 % recovery
Calibrator: 98.00 % of target value

HVEP Rep 1 collected 4/21/99:

undiluted : over range

x2 dilution	9.29 ng/mL
	10.00 ng/mL
	10.67 ng/mL
	9.99 Mean
	0.69 SD
x5 dilution	9.74 ng/mL
	9.99 ng/mL
	9.42 ng/mL
	9.72 Mean
	0.29 SD

Study: SDA Phase 2
Study #: N003043B

Date: 5/11/99
Initial: [illegible]

Spike and Recovery

47 mm filters pulped with 10 mL buffer. Values below not corrected for dilution.
Filters spiked 5/11/99, dried 1 hour, placed into 15 mL centrifuge tubes
All 47 mm filters diluted with 10 mL buffer, shaken/rotated ~1 hour, filtered

	Results	
Calibrator, 500 pg/mL	480 pg/mL*	
	482 pg/mL	
	481 Mean	
	1 SD	
Filter Spike 1, 500 pg/mL	492 pg/mL*	*Each value is a mean of four wells.
	491 pg/mL	
Filter Spike 2, 500 pg/mL	513 pg/mL	
	515 pg/mL	
Filter Spike 3, 500 pg/mL	459 pg/mL	
	439 pg/mL	
	485 Mean	
	30 SD	

Filters: 97.0 % recovery
Calibrator: 96.2 % of target value

Study: SDA Phase 2
Study #: N003043B

Date: 12-14-99
Initials: [illegible]

Soap & Detergent Association - Spray Calculations - High & Low Volume Evaluation Procedures/High & Low Volume Blank Replicate Procedures

Filter Results via ELISA Analysis

The mass of enzyme collected on filters was: (source: KH Debban Memos 4/22/99)
(Note: filter results account for % recovery)

High vol method: 25 ml × 9.9 ng/ml = avg conc of enzyme in solution = 247.5 ng collected — Ratio Mass HiVol/LoVol: 20.3 :1

Low vol method: 10 ml × 1.22 ng/ml = avg conc of enzyme in solution = 12.2 ng collected — Ratio Mass HiVol/LoVol (accounting for recovery): 12.2 :1

Aerosizer Results

Based on Tests HVEP-REP#1 (4/21/99) and LVEP-REP#1 (4/22/99)
the mass concentration of aerosol during the spray event was:

-->Run ID:	HVEP-R1	LVEP-R1	LVEPBR	HVEPBR	HVEP-R1	
Time (min)	Mass Loading mg/m^3	Mass Loading mg/m^3	Mass Loading mg/m^3	Mass Loading mg/m^3	Mass Loading mg/m^3	
0	0.0004	0.0004	0.0003	0.0002	0.0004	
0.5	0.0006	0.0003	0.0005	0.0005	0.0006	
1.1	0.0005	0.0005	0.0006	0.0005	0.0005	
1.6	0.0684	0.0935	0.0284	0.6920	0.0684	
2.2	0.1570	0.2570	0.0814	0.7070	0.1570	
2.7	0.3410	0.3440	0.3250	0.2130	0.3410	
3.3	0.2260	0.1930	0.0661	0.1080	0.2260	
3.8	1.0000	0.1330	0.0275	0.2420	0.1531	<-------- This column corrected for data point @ T = 3.8 min
4.3	0.0802	0.0791	0.0507	0.0582	0.0802	
4.9	0.1080	0.0465	0.0098	0.3870	0.1080	
5.4	0.0656	0.0446	0.0184	0.2620	0.0656	
6.0	0.0345	0.0769	0.0141	0.0010	0.0345	
6.5	0.0491	0.0150	0.0031	0.0049	0.0491	
7.0	0.0767	0.0065	0.0033	0.0044	0.0767	
7.6	0.0160	0.0094	0.0029	0.0036	0.0160	
8.1	0.0263	0.0033	0.0014	0.0066	0.0263	
8.7	0.0065	0.0135	0.0014	0.0015	0.0065	
9.2	0.0087	0.0102	0.0010	0.0013	0.0087	
9.8	0.0260	0.0033	0.0011	0.0013	0.0260	
10.3	0.0039	0.0027	0.0011	0.0013	0.0039	
10.8	0.0034	0.0048	0.0011	0.0012	0.0034	
11.4	0.0024	0.0167	0.0010	0.0012	0.0024	
11.9	0.0024	0.0014	0.0017	0.0011	0.0024	
12.5	0.0012	0.0019	0.0010	0.0013	0.0012	
13.0	0.0029	0.0022	0.0010	0.0011	0.0029	
Avg ML:	0.1151	0.0677	0.0320	0.1349	0.0728	mg/m^3
	115.1	67.7	32.0	134.9	72.8	ng/l

-->Run ID:	HVEP-R1	LVEP-R1	LVEPBR	HVEPBR
Time (min)	Mean Particle Size (microns)	Mean Particle Size (microns)	Mean Particle Size (microns)	Mean Particle Size (microns)
0	1.361	1.235	1.261	1.158
0.5	1.4040	1.2720	1.379	1.269
1.1	1.3920	1.2970	1.323	1.337
1.6	10.7600	11.5900	8.022	16.16
2.2	14.4600	13.5800	13.07	12.32
2.7	12.7600	13.0200	13.96	13.61
3.3	12.7100	13.2800	10.41	11.39
3.8	12.7500	12.9900	8.97	11.23
4.3	9.8160	10.7200	9.901	9.9
4.9	11.5000	10.0700	6.543	10.9
5.4	10.3500	9.2630	6.558	9.585
6.0	8.4740	8.1870	6.395	6.961
6.5	8.3680	5.7150	2.955	3.751
7.0	7.9350	4.9130	3.758	3.809
7.6	6.3780	5.5900	3.198	3.628
8.1	6.5480	3.2150	1.773	4.185
8.7	3.9780	6.1530	1.676	1.931
9.2	4.5820	5.5640	1.426	1.502
9.8	5.4490	2.9110	1.386	1.714
10.3	3.4880	2.8090	1.366	1.718
10.8	2.8880	3.3140	1.399	1.424
11.4	2.5690	5.4470	1.34	1.499
11.9	2.1700	1.4750	1.624	1.392
12.5	4.625	1.819	1.336	1.483
13.0	2.892	2.223	1.395	1.366

Data Analysis

According to the calibration data, the following sampling rates apply:

			Time (min)	Vol Sample		Ratio Sample Vols HiVol/LoVol
Hi Vol:	260.36 lpm =	4.34 lps	12.5	3254.50	liters	13.4 :1
Low Vol	18.01 lpm =	0.30 lps	13.5	243.14	liters	

Time-weighted average conc derived from filter samples: (mass/(vol flow rate*time))

		accounting for recovery		
Hi Vol:	0.076 ng/l	0.084 ng/l	=	84.50 ng/m³
Low Vol:	0.050 ng/l	0.093 ng/l	=	92.92 ng/m³

Aerosol mass determined from API data: (conc*vol flow*time)
(note: API flow = 2 lpm, T actual = 11.38 min)

Hi Vol:	2620 ng
Low Vol:	1541 ng
Hi Vol Corr:	1656 ng

Ratio of API Total Mass Conc to Filter-derived Enzyme Conc:

		accounting for recovery
Hi Vol:	1514	1362
Low Vol:	1350	729
Hi Vol Corr:	957	861

Enzyme TWA conc derived from API sample data:

	Conc (mg/m^3)	Enz/product fr (mg/g)	Conc Enzyme (ng/m^3)
Hi Vol:	0.1151	0.203	23.37
Low Vol:	0.0677	0.203	13.75
Hi Vol Corr:	0.0728	0.203	14.77

Study: SDA Phase 2
Study #: N003043B

Date: 12-14-99
Initials: MAC

Soap & Detergent Association - Spray Calculations - High & Low Volume Control Evaluation Procedures (No Product in Sprayer)

Test ID:	Description
LVCEP	LoVol Sampler - Spraying Protocol
HVCEP	HiVol Sampler - Spraying Protocol

Aerosizer Results

-->Run ID:	LVCEP	HVCEP	LVCEP	HVCEP
Time (min)	Mass Loading mg/m³	Mass Loading mg/m³ X 10⁻³	Mass Loading mg/m³	Mass Loading mg/m³ X 10⁻³
0.0	0.0004	0.0005	0.39	0.51
0.5	0.0004	0.0005	0.41	0.55
1.1	0.0006	0.0007	0.59	0.71
1.6	0.0007	0.0005	0.73	0.52
2.2	0.0009	0.0005	0.94	0.52
2.7	0.0007	0.0006	0.67	0.56
3.3	0.0008	0.0005	0.78	0.55
3.8	0.0008	0.0006	0.76	0.62
4.3	0.0006	0.0007	0.58	0.74
4.9	0.0007	0.0010	0.69	0.97
5.4	0.0009	0.0012	0.89	1.20
6.0	0.0009	0.0010	0.91	1.01
6.5	0.0008	0.0009	0.84	0.85
7.0	0.0011	0.0011	1.11	1.12
7.6	0.0010	0.0010	1.01	0.97
8.1	0.0008	0.0010	0.77	1.03
8.7	0.0011	0.0015	1.11	1.49
9.2	0.0013	0.0008	1.26	0.82
9.8	0.0010	0.0011	0.96	1.13
10.3	0.0012	0.0009	1.17	0.92
10.8	0.0010	0.0012	0.96	1.20
11.4	0.0011	0.0011	1.05	1.10
11.9	0.0011	0.0013	1.10	1.28
12.5	0.0012	0.0011	1.19	1.14
13.0	0.0014	0.0009	1.39	0.87
Avg ML:	0.0009	0.0009		mg/m^3
	0.9	0.9		ng/l

-->Run ID:	LVCEP	HVCEP
Time (min)	Mean Particle Size microns	Mean Particle Size microns
0	1.367	1.478
0.5	1.462	1.428
1.1	1.534	1.383
1.6	1.77	1.43
2.2	1.63	1.431
2.7	1.502	1.402
3.3	1.758	1.427
3.8	1.365	1.505
4.3	1.468	1.414
4.9	1.414	1.496
5.4	1.479	1.475
6.0	1.497	1.429
6.5	1.477	1.53
7.0	1.528	1.462
7.6	1.476	1.467
8.1	1.459	1.464
8.7	1.489	1.793
9.2	1.54	1.469
9.8	1.464	1.53
10.3	1.506	1.419
10.8	1.43	1.399
11.4	1.458	1.463
11.9	1.428	1.475
12.5	1.464	1.45
13.0	1.514	1.433

Data Analysis

According to the calibration data, the following sampling rates apply:

			Time (min)	Vol Sample		Ratio Sample Vols HiVol/LoVol
Hi Vol:	260.36 lpm =	4.34 lps	13.0	3384.68	liters	14.5 :1
Low Vol:	18.01 lpm =	0.30 lps	13.0	234.13	liters	

Aerosol mass determined from API data: (conc*vol flow*time)
(note: API flow = 2 lpm, T actual = 12.90 min)

	LVCEP	HVCEP
Total Mass (ng):	23	23

Date: 12-14-99
Initials: MAZ

Study: SDA Phase 2
Study #: N003043B

Soap & Detergent Association - Spray Calculations - High & Low Volume Verification of Flushing System Procedures

Filter results via ELISA Analysis of Enzyme Content

Enzyme Analysis Results (ref: Memo-KD 5/20/99)

Test ID:	Description	LV-VFS	HV-VFS
HVVFS-B	HiVol Sampler - Before Spraying	3.4910	14.1000
HVVFS-D	HiVol Sampler - After Spraying	4.3710	21.6100
HVVFS-A	HiVol Sampler - During Spraying	4.5080	22.3800
LVVFS-B	LoVol Sampler - Before Spraying	4.5630	21.5900
LVVFS-D	LoVol Sampler - During Spraying	3.9760	17.9200
LVVFS-A	LoVol Sampler - After Spraying		
	Mean	4.3545	21.8600
	StDev:	0.2649	0.4504
	%CV	6.1%	2.1%

The mass of enzyme collected on filters was (ref: Memo-KD 5/20/99):

	HVVFS-B	HVVFS-D	HVVFS-A	LVVFS-B	LVVFS-D	LVVFS-A	
High vol method:	25	25	25	10	10	10	ml
	0	21.8600	0.15	0.102	4.3545	0.29	ng/ml = avg conc of enzyme in solution
	0	546.5	3.75	1.02	43.545	2.9	ng collected
Ratio Mass HiVol/LoVol:	0.0 :1	12.6 :1	1.3 :1				

Aerosizer Results

-->Run ID:	HVVFS-B	HVVFS-D	HVVFS-A	LVVFS-B	LVVFS-D	LVVFS-A	
Time (min)	Mass Loading mg/m^3	Mass Loading mg/m^3	Mass Loading mg/m^3	Mass Loading mg/m^3	Mass Loading mg/m^3	Mass Loading mg/m^3	
0.5	0.0002	0.0001	0.0001	0.0001	0.0001	0.0003	
1.1	0.0001	0.0001	0.0015	0.0002	0.0002	0.0002	
1.6	0.0003	0.0248	0.0009	0.0003	0.7610	0.0002	
2.2	0.0001	0.4370	0.0002	0.0001	1.0200	0.0029	
2.7	0.0003	0.5200	0.0002	0.0001	1.3600	0.0005	
3.3	0.0004	0.7280	0.0002	0.0003	0.6630	0.0006	
3.8	0.0003	0.6320	0.0004	0.0003	0.3990	0.0003	
4.3	0.0005	0.2820	0.0003	1.1200*	0.0182	0.0005	
4.9	0.0003	0.1870	0.0004	0.0002	0.1830	0.0003	
5.4	0.0004	0.1570	0.0005	0.0003	0.0818	0.0006	
6.0	0.0003	0.1670	0.0004	0.0003	0.0944	0.0005	
6.5	0.0003	0.1170	0.0006	0.0005	0.4690	0.0005	
7.0	0.0006	0.0962	0.0005	0.0006	0.1250	0.0006	
7.6	0.0007	0.0413	0.0005	0.0004	0.0205	0.0006	
8.1	0.0006	0.0368	0.0006	0.0005	0.0318	0.0004	
8.7	0.0006	0.0249	0.0009	0.0006	0.0142	0.0006	
9.2	0.0006	0.0192	0.0006	0.0006	0.1470	0.0007	
9.8	0.0004	0.0109	0.0006	0.0007	0.0188	0.0007	
10.3	0.0006	0.0421	0.0006	0.0007	0.0120	0.0008	
10.8	0.0006	0.0169	0.0007	0.0010	0.0155	0.0006	
11.4	0.0007	0.0130	0.0007	0.0009	0.0123	0.0005	
11.9	0.0008	0.0198	0.0009	0.0009	0.0083	0.0012	
12.5	0.0007	0.0084	0.0008	0.0011	0.0086	0.0007	
13.0	0.0007	0.0079	0.0008	0.0007	0.0044	0.0007	
Avg ML:	0.0005	0.1631	0.0006	0.0005	0.2485	0.0006	mg/m^3
	0.5	163.1	0.6	0.5	248.5	0.6	ng/l

*Datum omitted from average.

Corrected

LVVFS-B	-->Run ID:	HVVFS-D	LVVFS-D
Mass Loading mg/m^3	Time (min)	Mean Particle Size microns	Mean Particle Size microns
0.0001	0.5	1.271	1.247
0.0002	1.1	1.271	1.328
0.0003	1.6	8.599	14.53
0.0001	2.2	12.36	14.01
0.0001	2.7	12.14	16.04
0.0003	3.3	13.08	15.36
0.0003	3.8	14.82	15.27
0.0003	4.3	13.19	5.356
0.0002	4.9	12.12	12.09
0.0003	5.4	11.9	10.31
0.0003	6.0	13.06	9.847
0.0005	6.5	9.443	10.94
0.0006	7.0	9.774	8.938
0.0004	7.6	8.044	6.862
0.0005	8.1	7.285	7.217
0.0006	8.7	5.989	6.497
0.0006	9.2	6.058	7.085
0.0007	9.8	4.874	7.296
0.0007	10.3	6.011	5.762
0.0010	10.8	4.981	4.919
0.0009	11.4	5.179	5.45
0.0009	11.9	5.07	4.435
0.0011	12.5	4.043	5.101
0.0007	13.0	4.286	3.254
0.0005			
0.5			

Data Analysis

According to the calibration data, the following sampling rates apply:

			Time (min)	Vol Sample		Ratio Sample Vols HiVol/LoVol
Hi Vol:	260.36 lpm =	4.34 lps	13.0	3384.68	liters	14.5 :1
Low Vol:	18.01 lpm =	0.30 lps	13.0	234.13	liters	

Time-weighted average conc derived from filter samples: (mass/(vol flow rate*time))

	HVVFS-B	HVVFS-D	HVVFS-A	LVVFS-B	LVVFS-D	LVVFS-A
ng/l	0.000	0.161	0.001	0.004	0.186	0.012
ng/m^3	0.000	161.463	1.108	4.357	185.986	12.386

Aerosol mass determined from API data: (conc*vol flow*time)
(note: API flow = 2 lpm, T actual = 12.90 min)

	HVVFS-B	HVVFS-D	HVVFS-A	LVVFS-B	LVVFS-D	LVVFS-A
Total Mass (ng):	12	4209	15	13	6412	17

Ratio of API Total Mass Conc to Filter-derived Enzyme Conc:

HVVFS-B	HVVFS-D	HVVFS-A	LVVFS-B	LVVFS-D	LVVFS-A
--------	1010	521	115	1336	52

Enzyme TWA conc derived from API sample data:

	Conc (mg/m^3)	Enz/product (mg/g)	Air Conc Enzyme (ng/m^3)
Hi Vol Test Run:	0.1631	0.203	33.1187
Low Vol Test Run:	0.2485	0.203	50.4522

Study: SDA Phase 2
Study #: N003043B

Date: 12-14-99
Initials: TDK

Soap & Detergent Association - Spray Calculations - High Volume Product Evaluation Procedure

Test Conditions	HVPEP Control	HVPEP Rep 1	HVPEP Rep 2	HVPEP Rep 3	HVPEP Rep 4	HVPEP Rep 5
Room Temperature (°F):	78.9	80.3	81.5	82.0	82.5	83.0
Room Relative Humidity (%RH):	40	41	44	42	44	45

Filter Results via ELISA Analysis of Enzyme Content

Test ID:	Description	HVPEP Control ng/ml	HVPEP Rep 1 ng/ml	HVPEP Rep 2 ng/ml	HVPEP Rep 3 ng/ml	HVPEP Rep 4 ng/ml	HVPEP Rep 5 ng/ml	
HVPEP Control	HiVol Sampler - Spraying Protocol	0.00	5.78	8.46	8.66	8.28	9.43	
HVPEP Rep 1	HiVol Sampler - Spraying Protocol		6.35	9.50	9.41	11.11	9.50	
HVPEP Rep 2	HiVol Sampler - Spraying Protocol		6.02	10.82	8.74	11.29	8.55	
HVPEP Rep 3	HiVol Sampler - Spraying Protocol		4.64	10.32	6.11	9.39	7.35	
HVPEP Rep 4	HiVol Sampler - Spraying Protocol		2.40	7.51	4.32	8.74	6.88	
HVPEP Rep 5	HiVol Sampler - Spraying Protocol	0.00	6.05	10.21	8.94	10.60	9.26	Mean
		—	0.286	0.668	0.412	1.049	0.642	St Dev
		—	4.7%	6.5%	4.6%	9.9%	6.9%	% CV

The mass of enzyme collected on filters was (ref: Memo-KD 5/21/99):

	HVPEP Control	HVPEP Rep 1	HVPEP Rep 2	HVPEP Rep 3	HVPEP Rep 4	HVPEP Rep 5	
High vol method:	25	25	25	25	25	25	ml
	0	6.05	10.21	8.94	10.60	9.26	ng/ml = avg conc of enzyme in solution
	0	151.3	255.3	223.4	264.9	231.5	ng collected

Aerosizer Results

--->Run ID:	HVPEP Control	HVPEP Rep 1	HVPEP Rep 2	HVPEP Rep 3	HVPEP Rep 4	HVPEP Rep 5	Average		Calc
Time (min)	Mass Loading mg/m^3	Mass Loading mg/m^3	Mass Loading mg/m^3	Mass Loading mg/m^3	Mass Loading mg/m^3	Mass Loading mg/m^3	Mass Loading mg/m^3	Mass Loading St Dev	Enzyme Loading ng/m^3
0	0.0004	0.0007	0.0004	0.0004	0.0004	0.0006	0.0005	0.0001	0.3153
0.5	0.0005	0.0005	0.0005	0.0004	0.0005	0.0006	0.0005	0.0001	0.3106
1.1	0.0005	0.0008	0.0008	0.0005	0.0052	0.0006	0.0015	0.0021	0.9529
1.6	0.0005	0.1560	0.2390	0.7480	0.9020	0.2560	0.4602	0.3396	286.1993
2.2	0.0005	0.0481	0.5050	0.6260	0.9040	1.1000	0.6366	0.4031	395.9152
2.7	0.0005	0.4390	0.2590	0.5900	0.8930	0.5010	0.5384	0.2304	334.8320
3.3	0.0007	0.1390	0.1040	1.3200	0.2660	0.5310	0.4720	0.5028	293.5377
3.8	0.0006	0.1950	0.0585	0.0837	0.1250	0.2440	0.1412	0.0773	87.8374
4.3	0.0007	0.0543	0.0533	0.0281	0.0592	0.0906	0.0571	0.0223	35.5106
4.9	0.0008	0.0342	0.0362	0.0353	0.0999	0.0623	0.0536	0.0284	33.3215
5.4	0.0007	0.0112	0.0211	0.0327	0.0397	0.0585	0.0326	0.0181	20.2989
6.0	0.0008	0.1120	0.0142	0.0165	0.0360	0.0614	0.0480	0.0405	29.8637
6.5	0.0010	0.0058	0.0195	0.0149	0.0333	0.0471	0.0241	0.0162	14.9978
7.0	0.0007	0.0117	0.0150	0.1490	0.0632	0.0411	0.0560	0.0560	34.8265
7.6	0.0007	0.0028	0.0138	0.0061	0.0230	0.0389	0.0169	0.0145	10.5251
8.1	0.0008	0.0065	0.0043	0.0052	0.0208	0.0546	0.0183	0.0214	11.3584
8.7	0.0011	0.0051	0.1160	0.0155	0.0212	0.0058	0.0327	0.0470	20.3524
9.2	0.0009	0.0017	0.0071	0.0057	0.0157	0.0163	0.0093	0.0064	5.7849
9.8	0.0010	0.1230	0.0099	0.0027	0.0100	0.1210	0.0533	0.0628	33.1611
10.3	0.0011	0.0013	0.0033	0.0059	0.0150	0.0404	0.0132	0.0161	8.1967
10.8	0.0009	0.0025	0.0025	0.0010	0.0092	0.0154	0.0063	0.0059	3.9018
11.4	0.0011	0.0013	0.0073	0.0013	0.0084	0.0144	0.0065	0.0055	4.0635
11.9	0.0011	0.0013	0.0015	0.0062	0.0060	0.0255	0.0086	0.0099	5.3633
12.5	0.0009	0.0012	0.0014	0.0014	0.0102	0.0142	0.0057	0.0061	3.5249
13.0	0.0009	0.0011	0.0012	0.0021	0.0056	0.0090	0.0038	0.0035	2.3458
Avg ML:	0.0008	0.0543	0.0602	0.1480	0.1430	0.1340	0.1079	mg/m^3	67.0919
	0.8	54.3	60.2	148.0	143.0	134.0	107.9	ng/l	
Max (ng/l)	1.0900	439	505	1320	904	1100	637	0.1912	395.92

--->Run ID:	HVPEP Rep 1	HVPEP Rep 2	HVPEP Rep 3	HVPEP Rep 4	HVPEP Rep 5	Average
Time (min)	Mean Particle Size microns	Mean Particle Size microns	Mean Particle Size microns	Mean Particle Size microns	Mean Particle Size microns	Mean Particle Size microns
0	1.39	1.30	1.42	1.30	1.42	1.37
0.5	1.34	1.30	1.27	1.37	1.44	1.34
1.1	1.35	1.33	1.37	1.38	1.41	1.37
1.6	1.19	11.69	14.60	11.07	9.92	9.69
2.2	10.12	11.86	13.61	11.13	10.95	11.53
2.7	14.01	11.26	13.84	11.73	10.40	12.25
3.3	12.75	10.43	14.37	12.58	11.97	12.42
3.8	11.83	9.10	11.05	10.06	9.89	10.39
4.3	9.75	8.93	10.09	10.16	8.27	9.44
4.9	8.70	7.84	8.92	9.42	8.03	8.54
5.4	5.11	6.65	8.20	8.92	7.63	7.34
6.0	7.15	5.64	6.29	7.62	7.72	6.89
6.5	3.89	6.77	5.89	6.57	6.96	6.02
7.0	4.69	5.89	7.90	6.54	6.76	6.35
7.6	3.08	5.93	3.97	6.77	7.36	5.42
8.1	4.45	3.49	4.00	6.62	7.05	5.13
8.7	3.94	6.44	5.04	6.20	3.48	5.02
9.2	1.81	4.53	4.26	5.40	5.64	4.33
9.8	5.62	5.54	2.45	4.63	6.79	5.01
10.3	1.42	2.33	4.06	5.57	6.05	3.89
10.8	2.34	2.26	2.19	4.75	4.73	3.25
11.4	1.44	3.81	1.50	4.28	5.65	3.33
11.9	1.83	1.46	3.76	4.45	5.49	3.40
12.5	1.38	1.47	1.43	4.44	4.34	2.61
13.0	1.41	1.37	2.13	3.41	3.89	2.44
Max µm --->	14.01	11.86	14.60	12.58	11.97	12.42

Data Analysis

According to the calibration data, the following sampling rates apply:

			Time (min)	Vol Sample		Ratio Sample Vols HiVol/LoVol
Hi Vol:	260.36 lpm =	4.34 lps	13.0	3384.68	liters	14.5:1
Low Vol:	18.01 lpm =	0.30 lps	13.0	234.13	liters	

Time-weighted average conc derived from filter samples: (mass/(vol flow rate*time))

	HVPEP Control	HVPEP Rep 1	HVPEP Rep 2	HVPEP Rep 3	HVPEP Rep 4	HVPEP Rep 5	Average	St Dev
ng/l	0.000	0.045	0.075	0.066	0.078	0.068	0.057	0.013
ng/m^3	0.000	44.687	75.438	66.008	78.269	68.396	56.560	

Aerosol mass determined from API data: (conc*vol flow*time)
(note, API flow = 2 lpm, T actual = 12.90 min)

	HVPEP Control	HVPEP Rep 1	HVPEP Rep 2	HVPEP Rep 3	HVPEP Rep 4	HVPEP Rep 5	Average
Total Mass (ng):	20	1400	1553	3818	3689	3457	2783

Maximum Calculated Enzyme Conc from API & Filter Results
(Predicted from Max API reading X ratio of enzyme mass conc/aerosol mass conc)

	HVPEP Control	HVPEP Rep 1	HVPEP Rep 2	HVPEP Rep 3	HVPEP Rep 4	HVPEP Rep 5	Average
Max Enzyme Conc (ng/m^3)	—	361.57	633.06	588.81	494.85	561.42	395.92

Ratio of API Total Mass Conc to Filter-derived Enzyme Conc:

	HVPEP Control	HVPEP Rep 1	HVPEP Rep 2	HVPEP Rep 3	HVPEP Rep 4	HVPEP Rep 5	Average	St Dev
	—	1214	798	2242	1827	1959	1608	588.4

Enzyme TWA conc derived from API sample data:

	Conc (mg/m^3)	Enziproduct (mg/g)	Air Conc Enzyme (ng/m^3)
HVPEP Rep 1	0.0543	0.203	11.0141
HVPEP Rep 2	0.0602	0.203	12.2161
HVPEP Rep 3	0.1480	0.203	30.0397
HVPEP Rep 4	0.1430	0.203	29.0258
HVPEP Rep 5	0.1340	0.203	27.2042
Average	0.1079	0.203	21.9000

Airborne Mass Concentration - Enzyme vs Aerosol

Analytical Method	Test Group HVPEP Blank (ng/m3)	HVPEP Rep 1 (ng/m3)	HVPEP Rep 2 (ng/m3)	HVPEP Rep 3 (ng/m3)	HVPEP Rep 4 (ng/m3)	HVPEP Rep 5 (ng/m3)
ELISA	0.0	44.7	75.4	66.0	78.3	68.4
API	789	54,257	60,178	147,979	142,984	134,011
Ratio API/ELISA	----	1214	798	2242	1827	1959

Date: 12-14-99
Initials: RDKC

Soap & Detergent Association - Spray Calculations for Low Volume Product Evaluation Procedure (Repeated Run)

Test Conditions	HVPEP Control	HVPEP Rep 1	HVPEP Rep 2	HVPEP Rep 3	HVPEP Rep 4	HVPEP Rep 5
Room Temperature (°F):	79.8	81.5	81.7	82.3	81.9	82.2
Room Relative Humidity (%RH):	53	58	58	60	57	58

Filter Results via ELISA Analysis of Enzyme Content

Test ID:	Description	LVPEP Control ng/ml	LVPEP Rep 1 ng/ml	LVPEP Rep 2 ng/ml	LVPEP Rep 3 ng/ml	LVPEP Rep 4 ng/ml	LVPEP Rep 5 ng/ml	
LVPEP Control	LoVol Sampler - Spraying Protocol	0.00	3.28	3.00	2.38	2.75	2.75	
LVPEP Rep 1	LoVol Sampler - Spraying Protocol							
LVPEP Rep 2	LoVol Sampler - Spraying Protocol							
LVPEP Rep 3	LoVol Sampler - Spraying Protocol							
LVPEP Rep 4	LoVol Sampler - Spraying Protocol							
LVPEP Rep 5	LoVol Sampler - Spraying Protocol							
		0.00	3.28	3.00	2.38	2.75	2.75	Mean
		—	0.000	0.000	0.000	0.000	0.000	St Dev
		—	0.0%	0.0%	0.0%	0.0%	0.0%	% CV

The mass of enzyme collected on filters was (ref: Memo-KD 8/25/99):

	LVPEP Control	LVPEP Rep 1	LVPEP Rep 2	LVPEP Rep 3	LVPEP Rep 4	LVPEP Rep 5	
Lo vol method:	10	10	10	10	10	10	ml
	0	3.28	3.00	2.38	2.75	2.75	ng/ml = avg conc of enzyme in solution
	0	32.8	30.0	23.8	27.5	27.5	ng collected

Aerosizer Results

->Run ID:	LVPEP Control	LVPEP Rep 1	LVPEP Rep 2	LVPEP Rep 3	LVPEP Rep 4	LVPEP Rep 5	Average			->Run ID:	LVPEP Rep 1	LVPEP Rep 2	LVPEP Rep 3	LVPEP Rep 4	LVPEP Rep 5	Average
Time (min)	Mass Loading mg/m^3	Mass Loading mg/m^3	Mass Loading mg/m^3	Mass Loading mg/m^3	Mass Loading mg/m^3	Mass Loading mg/m^3	Mass Loading mg/m^3	Mass Loading St Dev	Enzyme Conc ng/m^3	Time (min)	Mean Particle Size microns	Mean Particle Size microns	Mean Particle Size microns	Mean Particle Size microns	Mean Particle Size microns	Mean Particle Size microns
0	0.000224	0.0002	0.0002	0.0002	0.0002	0.0002	0.0002	0.0000	0.66	0	1.22	1.25	1.30	1.38	1.23	1.28
0.5	0.000213	0.0003	0.0003	0.0003	0.0002	0.0002	0.0003	0.0000	0.84	0.5	1.09	1.36	1.37	1.27	1.26	1.27
1.1	0.000193	0.0002	0.0003	0.0003	0.0002	0.0003	0.0003	0.0000	0.85	1.1	1.21	1.20	1.19	1.20	1.32	1.22
1.8	0.000275	0.0201	0.1130	0.0370	0.2530	0.0511	0.0948	0.0951	298.48	1.8	6.82	9.49	10.22	10.03	8.26	8.96
2.2	0.000293	0.0197	0.1610	0.1650	0.4300	0.0551	0.1662	0.1608	522.94	2.2	6.75	10.02	10.29	10.05	9.06	9.23
2.7	0.000269	0.0451	0.1170	0.1040	0.0240	0.1200	0.0820	0.0444	258.14	2.7	8.48	9.24	9.87	8.17	9.28	9.01
3.3	0.000265	0.0622	0.0438	0.0861	0.0954	0.1140	0.0603	0.0276	252.72	3.3	9.25	9.06	9.83	9.81	8.73	9.34
3.8	0.000347	0.0634	0.0310	0.0424	0.1150	0.0073	0.0518	0.0407	163.10	3.8	8.95	8.08	8.48	10.17	3.92	7.92
4.3	0.000267	0.0433	0.1600	0.0461	0.0594	0.0803	0.0778	0.0482	244.92	4.3	8.37	6.78	8.61	8.51	9.03	8.26
4.9	0.000347	0.0192	0.1340	0.0253	0.0438	0.0215	0.0488	0.0486	153.46	4.9	6.75	8.57	8.02	7.90	6.86	7.62
5.4	0.000464	0.0163	0.0231	0.0373	0.0368	0.0260	0.0279	0.0091	87.81	5.4	6.66	8.24	8.20	7.58	7.04	7.54
6.0	0.000411	0.2030	0.0254	0.0259	0.0321	0.0231	0.0625	0.0786	196.70	6.0	8.56	8.70	7.00	7.71	6.86	7.76
6.5	0.000374	0.0159	0.0201	0.1410	0.0134	0.0273	0.0435	0.0547	137.03	6.5	6.14	6.89	8.29	6.40	7.04	6.95
7.0	0.000399	0.0104	0.0182	0.0125	0.1190	0.0100	0.0340	0.0476	107.07	7.0	5.90	7.14	5.64	7.60	6.04	6.46
7.6	0.000458	0.0077	0.0120	0.0127	0.0224	0.0251	0.0160	0.0074	50.29	7.6	5.25	6.05	6.30	6.97	7.25	6.36
8.1	0.000401	0.0033	0.0087	0.0172	0.0160	0.2170	0.0524	0.0922	164.99	8.1	4.34	5.72	6.47	6.60	8.40	6.31
8.7	0.000400	0.0223	0.0071	0.0136	0.0136	0.0117	0.0137	0.0055	42.98	8.7	6.78	4.45	5.79	6.10	5.48	5.72
9.2	0.000495	0.0050	0.0055	0.0212	0.0110	0.0113	0.0108	0.0065	34.01	9.2	4.39	4.65	5.27	5.42	6.09	5.16
9.8	0.000510	0.0053	0.0029	0.0068	0.0096	0.0132	0.0075	0.0040	23.60	9.8	4.61	3.79	4.49	5.18	5.98	4.81
10.3	0.000489	0.0012	0.0046	0.0024	0.0146	0.0056	0.0057	0.0053	17.89	10.3	2.80	4.74	3.16	6.53	4.09	4.26
10.8	0.000588	0.0011	0.0011	0.0026	0.0036	0.0179	0.0053	0.0071	16.54	10.8	2.01	1.93	3.93	3.96	5.51	3.47
11.4	0.000584	0.0012	0.0065	0.0076	0.0041	0.0094	0.0058	0.0032	18.10	11.4	1.82	4.36	4.39	4.09	5.47	4.03
11.9	0.000510	0.0007	0.0015	0.1210	0.0046	0.0037	0.0263	0.0530	82.73	11.9	1.41	2.56	5.58	4.24	4.16	3.59
12.5	0.000545	0.0032	0.0007	0.0018	0.0973	0.0058	0.0217	0.0423	68.35	12.5	3.33	1.39	1.91	5.83	4.68	3.42
13.0	0.000503	0.0007	0.0019	0.0008	0.0030	0.0032	0.0019	0.0012	6.11	13.0	1.36	2.77	1.50	3.34	3.67	2.53
Avg ML:	0.0004	0.0228	0.0360	0.0373	0.0569	0.0344	0.0375	mg/m^3	118.01							
	0.4	22.8	36.0	37.3	56.9	34.4	37.5	ng/l								
Max (ng/l)	0.5880	203	161	165	430	217	166	0.0398	522.94	Max µm —>	9.25	10.02	10.29	10.17	9.28	9.34

Data Analysis

According to the calibration data, the following sampling rates apply:

			Time (min)	Vol Sample		Ratio Sample Vols HiVol/LoVol
Hi Vol:	260.36 lpm =	4.34 lps	13.0	3384.68	liters	14.5 :1
Low Vol:	18.01 lpm =	0.30 lps	13.0	234.13	liters	

Time-weighted average conc derived from filter samples: (mass/(vol flow rate*time))

	LVPEP Control	LVPEP Rep 1	LVPEP Rep 2	LVPEP Rep 3	LVPEP Rep 4	LVPEP Rep 5	Average	St Dev
ng/l	0.000	0.140	0.128	0.102	0.117	0.117	0.121	0.014
ng/m^3	0.000	140.093	128.134	101.653	117.456	117.456	120.958	

Aerosol mass determined from API data. (conc*vol flow*time)
(note: API flow = 2 lpm, T actual = 12.90 min)

	LVPEP Control	LVPEP Rep 1	LVPEP Rep 2	LVPEP Rep 3	LVPEP Rep 4	LVPEP Rep 5	Average
Total Mass (ng):	10	589	929	963	1468	888	967

Maximum Calculated Enzyme Conc from API & Filter Results
(Predicted from Max API reading X ratio of enzyme mass conc/aerosol mass conc)

	HVPEP Control	HVPEP Rep 1	HVPEP Rep 2	HVPEP Rep 3	HVPEP Rep 4	HVPEP Rep 5	Average
Max Enzyme Conc (ng/m^3)	—	1245	573	449	888	741	523

Ratio of API Total Mass Conc to Filter-derived Enzyme Conc:

	LVPEP Control	LVPEP Rep 1	LVPEP Rep 2	LVPEP Rep 3	LVPEP Rep 4	LVPEP Rep 5	Average	ST Dev
	—	163	251	367	484	293	318	118.5

Enzyme TWA conc derived from API sample data:

	Conc (mg/m^3)	Enz/product (mg/g)	Air Conc Enzyme (ng/m^3)
LVPEP Rep 1	0.0228	0.203	4.6355
LVPEP Rep 2	0.0360	0.203	7.3070
LVPEP Rep 3	0.0373	0.203	7.5810
LVPEP Rep 4	0.0569	0.203	11.5504
LVPEP Rep 5	0.0344	0.203	6.9857
Average	0.0375	0.203	7.6119

Airborne Mass Concentration - Enzyme vs Aerosol

Analytical Method	Test Group LVPEP Control (ng/m3)	LVPEP Rep 1 (ng/m3)	LVPEP Rep 2 (ng/m3)	LVPEP Rep 3 (ng/m3)	LVPEP Rep 4 (ng/m3)	LVPEP Rep 5 (ng/m3)
ELISA	0.0					
API	392	22,835	35,995	37,345	56,898	34,412
Ratio API/ELISA	—	—	—	—	—	—

Appendix B. Study Protocol

BATTELLE STUDY PROTOCOL

CHARACTERIZATION OF AEROSOLS GENERATED FROM A CONSUMER SPRAY PRODUCT PHASE II

Prepared For:

The Soap and Detergent Association

Battelle

. . . Putting Technology To Work

CHARACTERIZATION OF AEROSOLS GENERATED FROM A CONSUMER SPRAY PRODUCT PHASE II

APPROVED, BATTELLE:

John R. Decker Jr., B.S.
Study Director

2-25-99
Date

Terry J. Mast, Ph.D., D.A.B.T
Senior Program Director

2/25/99
Date

APPROVED, SPONSOR:

Jenan Al-Atrash, Dr.PH
Director, Human Health & Safety -SDA
Project Monitor

3/9/99
Date

CHARACTERIZATION OF AEROSOLS GENERATED FROM A CONSUMER SPRAY PRODUCT PHASE II

1.0 PRINCIPALS

1.1 Sponsor

The Soap and Detergent Association
475 Park Avenue South
New York, NY 10016

1.1.1 Sponsor's Project Monitor

Jenan Al-Atrash
Director, Human Health & Safety

1.2 Performing Laboratory

1.2.1 Facility

Battelle
Toxicology Northwest
900 Battelle Blvd.
Richland, WA 99352

1.2.2 Study Director

John R. Decker, Jr.
Manager, Bioengineering & Aerosol Technology Technical Center

1.3 Proposed Dates:

Initiation of Experiments: Within two weeks from signing of contract and receipt of all test articles and materials from Sponsor.
Completion of Experiments: Within four weeks from initiation of experiments
Submission of Draft Final Report: Within four weeks from completion of experiments
Submission of Final Report: Within 30 days from receipt of final comments from Sponsor

2.0 STUDY CONDUCT

This protocol will be the controlling document in case of discrepancies between the protocol and standard operating procedures (SOPs). This study will be conducted in the sprit of EPA Good Laboratory Practices Regulations (40 CFR, Part 792) for the conduct of non-clinical studies. The study will not be listed on Battelle's list of regulated studies. All records that would be required to

reconstruct the study will be maintained. All data generated from any portion of this study will be retained at Battelle until acceptance of the final report, when all materials will be returned to the archival facility designated by the Sponsor. Following completion of the study, test articles and chemicals will be disposed following instructions of the Sponsor.

3.0 OBJECTIVE

The purpose of this study is to characterize aerosols present in the expected breathing zone of a potential user after simulated heavy usage delivery of an enzyme-containing trigger spray product. This study capitalizes on the techniques developed in the Pilot Study (Battelle Study Number N003043A).

4.0 DESIGN OVERVIEW

A single test configuration, spray product and fabric type will be used. The purpose of the test will be to:

(1) Determine the profile of the aerosol mass concentration and size distribution in the "breathing zone" during the simulated spray episode.
(2) Determine the concentration of enzyme in the breathing zone during the simulated spray episode using both high and low volume sampling techniques.

All spray episodes will be performed in a test chamber with three requirements. First, laboratory personnel will not be exposed to discharged vapors and particles. Gloves, a long-sleeved lab coat, eye protection and respiratory protection equipment will be worn during this study to prevent any potential for skin irritation and the development of respiratory allergies. Second, the experimental region will remain unaffected by air currents and activity in the laboratory. Third, the test chamber atmosphere will be cleared of any residual test compound between test sequences.

5.0 PRODUCT EVALUATION PROCEDURES

5.1 Test Product

The Sponsor will provide the prototype spray laundry products and trigger sprayers as well as the antigen, antibody and ELISA standard for the ELISA method. All materials will be shipped at room temperature. The test articles will be stored at Battelle at room temperature. The ELISA materials will be stored at Battelle at approximately 4°C (not frozen). All materials will be allowed to equilibrate to room temperature prior to use.

The chemical evaluation, purity and stability of the test article and ELISA chemicals will be the responsibility of the Sponsor. The Sponsor will provide a certification and an MSDS of test article and all ELISA chemicals upon shipment to Battelle.

Approximately one week prior to the start of test evaluation, Battelle will perform an evaluation of the concentration of enzyme protein in test article using an ELISA method. The ELISA method will be validated prior to any evaluations using this method.

The trigger sprayer identified in the Pilot Study will be used for this study. Prior to beginning testing, this trigger sprayer will be checked for mass output per actuation, and diameter of

spray pattern to assure that its operation has not changed significantly from characteristics determined during the Pilot Study. The target setup (Figure 1) will be used for both mass output and spray pattern measurements. Mass output will be determined as the average mass loss (grams) from the trigger sprayer container from 5 consecutive actuations. These measurements will be repeated 3 times. If the trigger sprayer characteristics have changed significantly from the Pilot Study, the SDA will be notified and a similar trigger sprayer will be chosen from those tested during the Pilot Study. This replacement trigger sprayer will be retested to assure acceptable operation.

5.2 Experimental test chamber

All spray episodes will be performed in a test chamber with internal dimensions of 7 feet 4 inches high x 7 feet 10 inches deep x 7 feet 10 inches wide (2.24 x 2.39 x 2.39 meters). A door is located on the left front of the chamber. The chamber incorporates a high flow recirculation HEPA filtration system that will be used to eliminate the test article aerosol from the room between tests and to reduce the background aerosol.

5.3 Product use simulation configuration

The product use simulation configuration is detailed in Figures 1 and 2. The locations of the trigger sprayer and the target are intended to simulate typical use of the laundry product.

Products will be tested on a 36"tall x 48" wide x 30" deep (91 x 122 x 76 cm) table with a 6" (15 cm) tall back-splash. The table will be located 6" (15 cm) from the right side wall and 6" (15 cm) from the front wall of the test chamber (Figure 2).

The trigger sprayer will be actuated a distance of 6 inches (15 cm) from the spray nozzle to a target. The target will be a single layer piece of fabric. The fabric type will be a polyester/cotton blend material (approximately 18 inches × 18 inches [46 x 46 cm]) and will be supplied to Battelle by the Sponsor. The fabric will be prewashed by Battelle following Battelle standard operating procedure (BE.I-006-00) established by Battelle and approved by the Soap and Detergent Association.

The target will be backed with a single layer of plastic-backed absorbent paper. The target will be supported with the top edge 19.25 inches (49 cm) from the tabletop and the surface parallel to and 6 inches from the front edge of the tabletop. A pan will be placed below the target to catch any test article that may drip from the target. The pan will be raised 1.75 (4.4 cm) inches from the tabletop by a spacer. The spray nozzle will be located 10.25 inches (26 cm) above and at a 90-degree angle to the tabletop and 6 inches from the surface of the target.

5.4 Measurement Methods

The total mass (grams) output of the trigger sprayer will be determined by weighing each trigger sprayer before and after the actuation sequence for each of the sampling episode.

Total mass (grams) of the test article collected on the target fabric will be determined by weighing the six targets before and after each sampling episode.

The time profile and the total mass concentration of the aerosol (mg/m^3) in the breathing zone during each sampling experiment will be measured using an Aerosizer (Model LD, API, Amherst, ME). This instrument will also provide a time profile of the aerosol size distribution. The Aerosizer will be operated at a flow rate of 2 L/min. and a sampling window of 30 seconds. The Aerosizer is capable of measuring individually the particle size in the range of less than 0.2 to 200μm.

A single aerosol filter sample will be collected in the breathing zone during each sampling experiment. Two types of filter samples will be collected. A high volume sampler will be operated at a flow rate in the range from 300 to 400 L/min passing through a 10 cm glass fiber filter (Whatman GF/C). A low volume sampler will be operated at a flow rate of approximately 18 L/min passing through a 2.5 cm glass fiber filter (Whatman GF/C). The diameter of opening of the low volume filter sampler will be reduced such that the average face velocity will equal that of the high volume sampler. Sufficient space between the restricting orifice and the filter media will allow collection on the full surface of the filter media assuring low resistance to sample flow. The actual sample flow rate will be measured before the start of sampling and again following the sample collection.

The filters will be analyzed by the ELISA method to determine the concentration of enzyme protein the aerosol sample.

5.5 Aerosol sampler location

The aerosol sampling configuration is detailed in Figures 1 and 2. The locations of the samplers with respect to the trigger sprayer and target cloth are intended to simulate typical potential regions of likely human respiratory exposure.

Two simultaneous aerosol samples will be taken during each product simulation test; the Aerosizer and either the low or the high volume filter sample. The Aerosizer samples will measure the time profile of the relative aerosol mass concentration and the aerosol particle size distribution. The filter samples will measure the enzyme protein concentration by ELISA method.

The center of each sampler inlet will be 58 inches (147 cm) above the floor and 24 inches (61 cm) from the center of the target stain. Each sampler inlet will be placed in a plane 30 degrees to the side of the line between the sprayer and target stain and will be tipped 45 degrees from the vertical towards the target. The Aerosizer sampler will be located to the right of the target and the filter to the left as viewed from the user location.

5.6 Product dispensing simulation

The dispensing procedure will simulate consumer use. The trigger sprayer will be pre-weighed, placed in its location in the testing chamber and the dispensing procedure will begin. The actuation sequence will be manually controlled to provide a uniform force, which will deliver five sprays to the target at a rate of one stroke per second. There will be a 10-second lag between targets. This will be repeated again with a new target for a total of six targets.

6.0 EXPERIMENTAL DESIGN

Actual room air flow, temperature and humidity values within the experimental test chamber will be monitored and recorded during the test runs. The flow of air within the chamber will be minimized during tests by closing the door and turning off the HVAC and recirculation filter system. The relative humidity within the chamber will be maintained between 25 and 50 percent and the temperature between 70 to 85°F.

Aerosizer sampling will begin 1 minute before starting the first spray application to establish the background aerosol level. Sampling will continue through the spray sequence and for an additional 10 minutes after spraying cessation.

Filter sampling will also begin 1 minute before starting the first spray application and will continue for an additional 10 minutes after spraying cessation. Affect of both the high and low sample airflow through the filter on the Aerosizer sampling results will be determined by running one set of replicates without drawing air through the filter.

Five replicates of the product evaluation procedure will be run (i.e., five runs using high volume sampling and five runs using low volume sampling).

Prior to each product evaluation procedure (i.e., high and low volume sampling procedures), a control evaluation procedure will be performed without spraying the product to investigate the control conditions. The control test procedures will be run identically to the product evaluation procedures with the exception that no product will be placed in the sprayer. This will establish the baseline conditions for the Aerosizer.

During sampling, the chamber will have no air movement other than that created by drawing the samples. Between experimental runs the chamber will be flushed with fresh HEPA-filtered air for a sufficient time to rid the simulated breathing zone of any unwanted particles and vapors. Verification of removal of aerosols will be conducted prior to the start of the test by sampling with the Aerosizer.

Verification that the flush system clears the chamber of enzyme aerosol will be done by collecting filter samples before a test spray sequence, during the test spray sequence (with enzyme product) and immediately following the flushing period. These tests will be done with both high and low volume filter samples. The sample volume collected and the collection time will be the same for samples taken before and during the test spray sequence and following the flushing period.

7.0 ELISA METHOD

7.1 Overview

Air samples collected by filters will be analyzed for airborne enzyme concentration by elution of the enzyme containing particles from the filter into an known volume of assay buffer then analysis of the buffer-sample solution for enzyme concentration using Double-Antibody Sandwich Enzyme Linked Immunosorbant Assay (ELISA) methodology similar to that outlined by Miller *et al.* Concentration of the airborne enzyme present will then be calculated by multiplying the volume of the extraction buffer used per filter times the measured enzyme concentration in the buffer extract then dividing by the total air volume sampled during collection. Results will be reported as nanograms of enzyme protein per cubic meter of air. ELISA analysis will be done following Battelle Standard Operating Procedures "ELISA Analysis of Enzymes in Filtered Air Collections". This procedures will be validated for both the low and high volume sampling techniques using standard enzyme, antibody and antibody conjugates provided by the Sponsor. Validation will include spike and recovery testing and evaluation of high-volume and low-volume blank filters taken during a spray sequence using product without enzyme.

7.2 ELISA Standard, Antibody and Antibody Conjugate

These materials will be supplied by the Sponsor in concentrated stock form with the protein concentrations specified, except the standards which will be pre-diluted. Using these designated concentrations, dilutions required to attain the working solutions will be calculated. Pre-diluted standard solutions will be used as supplied. An enzyme calibrator solution will be provided by the Sponsor to check ELISA calibration during each ELISA run.

7.3 Sample Preparation

Filters will be extracted by placing the filter in a centrifuge tube with a known quantity of Sample Preparation Buffer (SPB) consisting approximately of 0.1% trizma base, 0.5% sodium thiosulfate pentahydrate, 0.015% calcium chloride dihydrate, 3% sodium chloride, 0.1%sodium azide and 0.1% BSA mixed in deionized water. The tube will be agitated until the pad is reduced to pulp and then centrifuged or filtered. Actual quantities of SPB used for each extraction will be reported.

7.4 Enzyme Measurement

Microtiter plates will be coated with rabbit capture antibody specific for the test article enzyme following the SOP. Dilutions and a zero concentration of the standard enzyme will be added to provide calibration standards. Sample preparations will then be added in quadruplicate. The plate will then be incubated and washed. Guinea pig detecting antibody will then be added to the wells again followed by incubation and washing. Guinea pig or goat peroxidase solution will be added followed by incubation and washing. OPD substrate solution will then be added to the wells followed by incubation and the addition of H_2SO_4 to stop the reaction. The absorbency of the resulting color change will be measured at 490/630 nanometers using an automatic plate reader. A calibration curve will be created using the

concentrations of standard enzyme. The concentration of enzyme present in the sample will be determined from the standard curve (pg/mL). The final conversion of protein in the air sample will be calculated from the formula:

$$ng/m^3 = \frac{(ng/mL) * (mL \text{ used to extract fluid}) * (\text{dilution factor})}{\text{Air sample volume in } m^3}$$

8.0 REPORTS

Upon completion of the study, a draft final report shall be prepared and delivered to the Sponsor within 4 weeks of the last experiment. The report will include but not be limited to the following:

- Objectives and procedures as stated in the approved protocol, including the ELISA SOP
- Descriptions of the setup and procedures used to generate and monitor aerosols
- Descriptions of the trigger sprayer output measurement setup and procedures used to generate and monitor aerosols
- Tabulation of the raw and processed data including: gravimetric evaluations of trigger sprayers, mass and particle size distribution evaluations of the aerosol, ELISA analysis of the filters, ELISA method figures of merit (recovery efficiency from filters [spike and recovery], standard curve, and reproducibility [based on the enzyme calibrator solution provided by the Sponsor]), and relationship between relative mass concentration measurements by the Aerosizer and measurement of enzyme from filter samples by ELISA.
- General summary of statistical results: mean, standard deviation, and coefficient of variation will be reported.

The Sponsor will submit comments, if any, on the draft report to the Study Director. The final report will be submitted to the Sponsor within 30 days of receipt of the Sponsor's comments on the draft report.

Upon approval of the final report, all study file data, raw and processed will be sent to the archival facility designated by the Sponsor.

9.0 REFERENCES

L.S. Miller, B.S. Bhullar, V.S. Moore, L.J. Scovell, J. Lamm, A. Sawhney, and L.A. Smith, *A Robotic Immunoassay System for Detergent Enzymes,* Laboratory Information Management 26:79 (1994).

Figure 1. Side View of Relative Orientation of Table, Trigger Sprayer, Vertical Target, and Sampler Ports (Aerosizer and Filter)

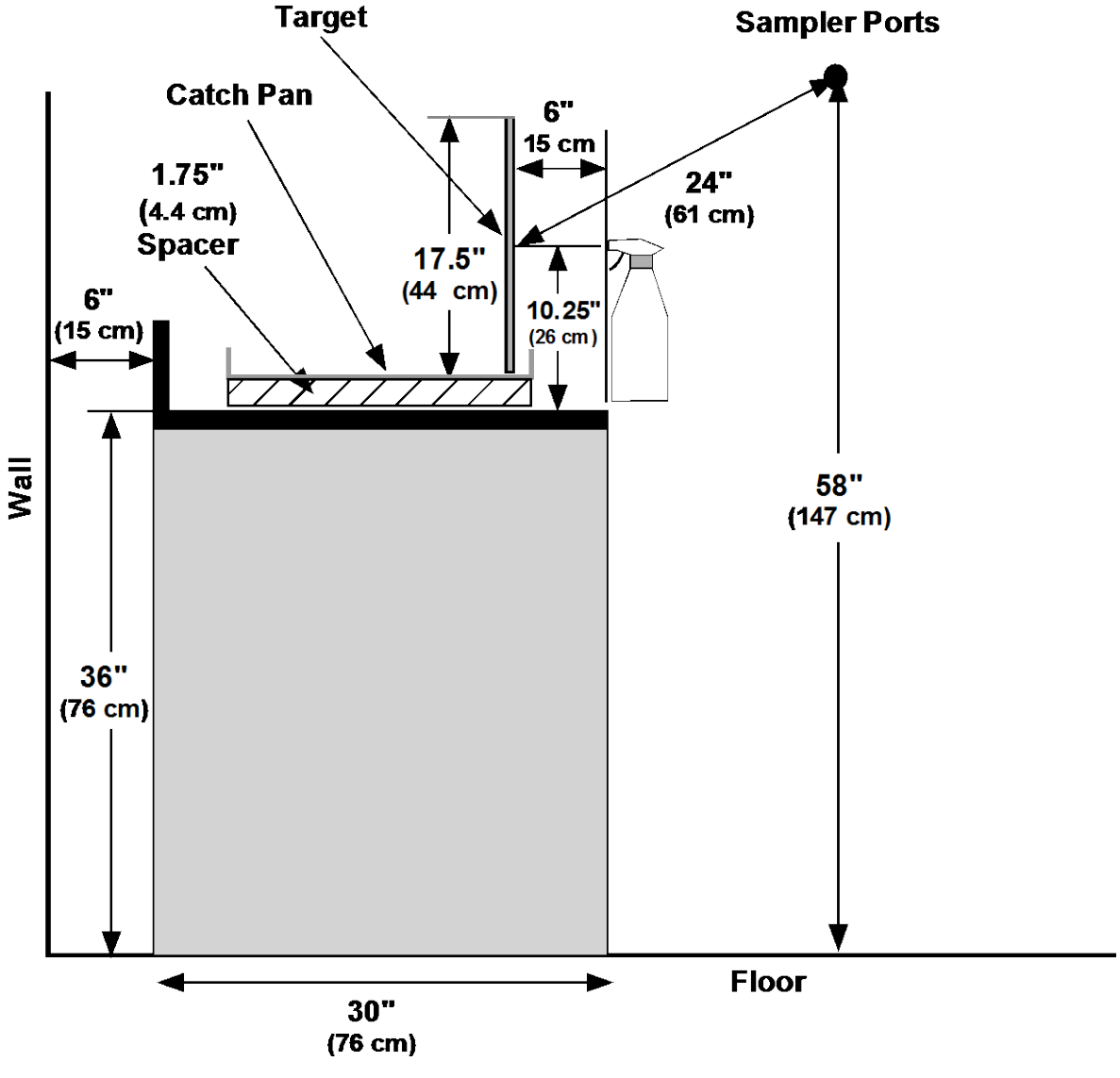

Figure 2. Top View of Relative Orientation of Table, Trigger Sprayer, Vertical Target, Sampler Ports (Aerosizer and Filter)

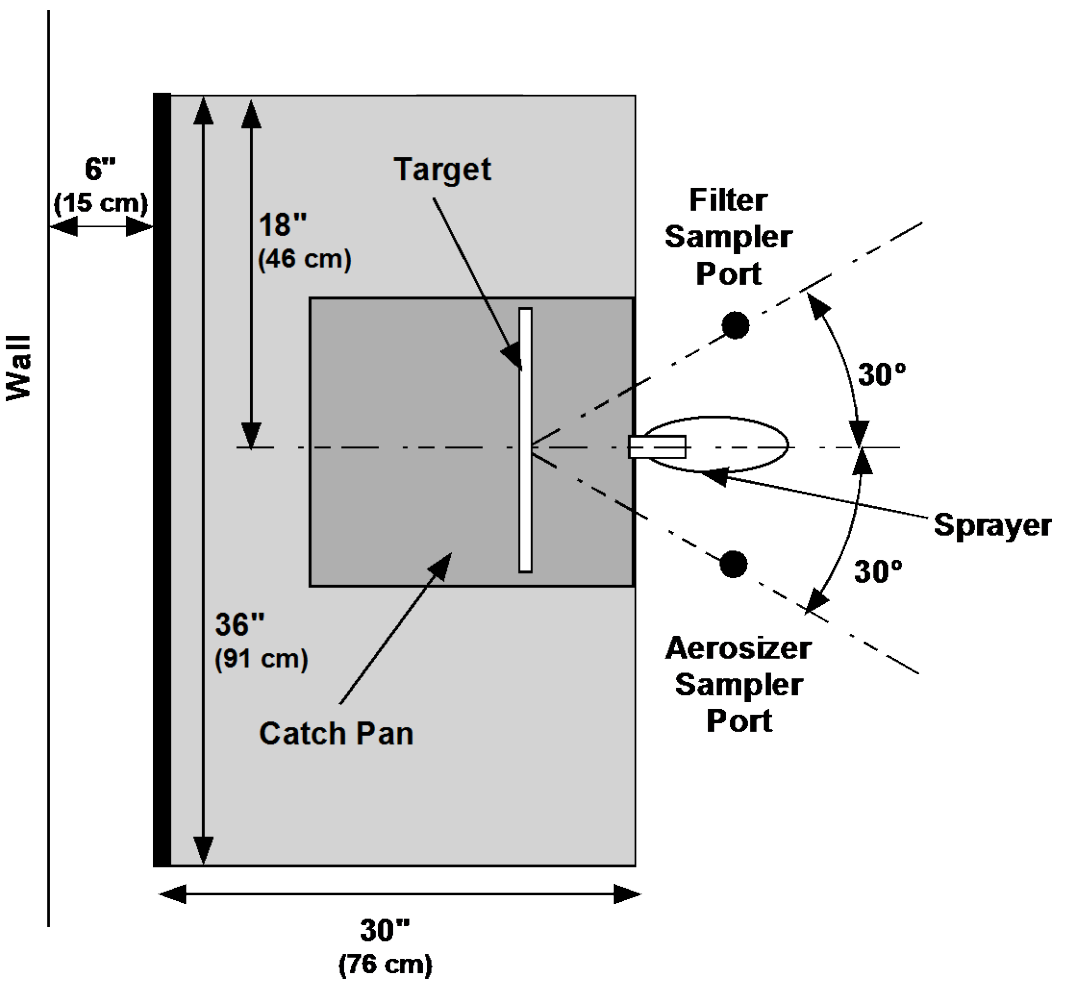

Appendix C. Specifications for SDA Generic Laundry Prespotter Formulation 14979-H-4-4

SC Johnson Wax
Worldwide Consumer Products
Home Cleaners Product Development

September 23, 1997

Ms. Mary Frike
The Procter & Gamble Co.
Ivorydale Technical Center
5299 Spring Grove Avenue
Cincinnati, OH 45217

Mr. James Wiersig
The Clorox Company
P O Box 493
Pleasanton, CA 94566-5642

Ms. Carol Resch
Unilever Research U.S.
45 River Road
Edgewater, NJ 07020

I am sending, under separate cover, the following formulation. I've taken most of your suggestions except for the Ca at 200ppm. Instead, I used our Racine tap water which has a hardness of 140 ppm and in our testing, helps stabilize the enzymes versus deionized water. If you would still like to add Ca to it, please let me know what salt and how much.

The formulation is as follows:

Material	14979H4-4
Tap Water	78.50
Borax, 5 Mol	0.5
Sodium Citrate	1.00
Surfonic L24-4	10.00
Propylene Glycol	10.00
Total	100.00%

I would recommend that the enzyme of choice be added by Battelle to the base just before testing to ensure compatibility as timing may get longer than desired.

The sample uses a Calmar trigger that was selected to be inbetween the soil & stain removers on the market for spray characteristics and still be consumer acceptable. I have also sent another sprayer along for you to see how variable the sprayer will be.

Please review the formulation and spray the sample to determine it's acceptability.
If you have any comments or questions, please give me a call at 414-260-2737.

Regards,

Jeanne O'Brien
Technology Specialist

Appendix D. MSDS for Test Article

MSDS # 22545

SDA GENERIC LAUNDRY PRESPOTTER

Date Issued: 23Jul1998

Supersedes: 05Dec1997

US MANUFACTURER:
S.C. Johnson & Son, Inc.
Phone: (800) 725-6737
Racine, Wisconsin 53403-2236
Emergency Phone: (888) 779-7920
International Emergency Phone:
(414) 886-1480

CANADIAN MANUFACTURER:
S.C. Johnson and Son, Limited
Phone: (800) 725-6737
1 Webster Street
Brantford, Ontario N3T 5R1
Transportation Emergency:
CANUTEC (collect) (613) 996-6666
Poison Control: (888) 779-7920

HAZARD RATING	HMIS	HAZARD	NFPA
4-Very High	1	Health	1
3-High	0	Flammability	0
2-Moderate	0	Reactivity	0
1-Slight		Special	
0-Insignificant			

DISTRIBUTED IN CANADA BY:
S.C. Johnson and Son, Limited
Phone: (800) 725-6737
1 Webster Street
Brantford, Ontario N3T 5R1

SECTION 1 - PRODUCT IDENTIFICATION

PRODUCT NAME..... SDA GENERIC LAUNDRY PRESPOTTER
REASON FOR CHANGE..... No significant changes. Section 2.
PRODUCT USE..... Household: Laundry care

SECTION 2 - INGREDIENT INFORMATION

INGREDIENT	WEIGHT%	EXPOSURE LIMIT/TOXICITY
Enzyme (CAS# 9014-01-1).....	<1.0	0.00006 mg/m³ CEILING ACGIH/OSH (SUBTILINS)
Sodium Citrate (CAS# 68-04-2).....	0.5-1.5	NOT ESTABLISHED
Alkoxylated Linear Alcohols (CAS# 68439-50-9).	7-13	NOT ESTABLISHED
Propylene Glycol (CAS# 57-55-6).....	7-13	NOT ESTABLISHED
Water (CAS# 7732-18-5).....	75-90	NOT ESTABLISHED

SECTION 3 - HEALTH HAZARDS IDENTIFICATION (Also See Section 11)

ROUTE(S) OF ENTRY..... Eye contact. Skin contact.
EFFECTS OF ACUTE EXPOSURE:
EYE..... May cause: Mild eye irritation.
SKIN..... None known.
INHALATION..... None known.
INGESTION..... None known.
MEDICAL CONDITIONS..... None known.
GENERALLY RECOGNIZED
AS BEING AGGRAVATED
BY EXPOSURE

SECTION 4 - FIRST AID MEASURES

EYE CONTACT..... Flush immediately with plenty of water for at least 15 to 20 minutes. If irritation persists, get medical attention.
SKIN CONTACT..... Rinse with plenty of water.
INHALATION..... No special requirements.
INGESTION..... Immediately drink 1-2 glasses of water or milk. Seek immediate medical attention.

SECTION 5 - FIRE AND EXPLOSION INFORMATION

FLASH POINT..... None.

SDA GENERIC LAUNDRY PRESPOTTER

Date Issued: 23Jul1998 Supersedes: 05Dec1997

SECTION 5 - FIRE AND EXPLOSION INFORMATION (continued)

FLAMMABLE LIMITS.....	Not applicable.
AUTOIGNITION..... TEMPERATURE	Not applicable.
EXTINGUISHING MEDIA....	Foam. CO2. Dry chemical. Water fog.
SPECIAL FIREFIGHTING... PROCEDURES	Normal fire fighting procedure may be used.
UNUSUAL FIRE AND..... EXPLOSION HAZARDS	Container may melt and leak in heat of fire.

SECTION 6 - PREVENTIVE RELEASE MEASURES

STEPS TO BE TAKEN IN... CASE MATERIAL IS RELEASED OR SPILLED	Dike large spills. Absorb with oil-dri or similar inert material Sweep or scrape up and containerize.

SECTION 7 - HANDLING AND STORAGE

PRECAUTIONARY..... INFORMATION	May be: Eye irritant. Avoid contact with eyes. If such contact occurs, flush immediately with plenty of water for at least 15 t 20 minutes. If irritation persists, seek medical aid. Keep out o reach of children.
OTHER HANDLING AND..... STORAGE CONDITIONS	Wash thoroughly after handling. Keep from freezing.

SECTION 8 - SPECIAL PROTECTION INFORMATION

RESPIRATORY PROTECTION.	No special requirements under normal use conditions.
VENTILATION.....	No special requirements.
PROTECTIVE GLOVES.....	No special requirements under normal use conditions.
EYE PROTECTION.....	No special requirements under normal use conditions.
OTHER PROTECTIVE..... MEASURES	No special requirements.

SECTION 9 - PHYSICAL AND CHEMICAL PROPERTIES

COLOR.....	Opaque to Translucent White
PRODUCT STATE.....	Viscous Liquid.
ODOR.....	Odorless
pH.....	7.8-8.2
ODOR THRESHOLD.....	Not available.
SOLUBILITY IN WATER....	Complete
SPECIFIC GRAVITY..... (H2O=1)	1.01-1.02
VISCOSITY.....	Not available
VAPOR DENSITY (AIR=1)..	Not available.
EVAPORATION RATE (BUTYL ACETATE=1)	Not available.
VAPOR PRESSURE (mm HG).	Not available.
BOILING POINT.....	Not available.
FREEZING POINT.....	Not available.
COEFFICIENT OF..... WATER/OIL	Not available.
PERCENT VOLATILE BY.... VOLUME (%)	Not available.

SDA GENERIC LAUNDRY PRESPOTTER

Date Issued: 23Jul1998 Supersedes: 05Dec1997

SECTION 9 - PHYSICAL AND CHEMICAL PROPERTIES (continued)

VOLATILE ORGANIC COMPOUND (VOC)	Not available.
THEORETICAL VOC (LB/GAL)	Not available.

SECTION 10 - STABILITY AND REACTIVITY

STABILITY	Stable
STABILITY - CONDITIONS TO AVOID	Not applicable.
INCOMPATIBILITY	None known.
HAZARDOUS DECOMPOSITION PRODUCTS	When exposed to fire: Produces normal products of combustion.
HAZARDOUS POLYMERIZATION	Will not occur.
HAZARDOUS POLYMERIZATION - CONDITIONS TO AVOID	Not applicable.

SECTION 11 - TOXICOLOGY INFORMATION (Also See Section 3)

LD50 (ACUTE ORAL TOX)	Not available.
LD50 (ACUTE DERMAL TOX)	Not available.
EFFECTS OF CHRONIC EXPOSURE	None known.
SENSITIZATION	None known.
CARCINOGENICITY	None known.
REPRODUCTIVE TOXICITY	None known.
TERATOGENICITY	None known.
MUTAGENICITY	None known.

SECTION 12 - ECOLOGICAL INFORMATION

ENVIRONMENTAL DATA	Not available.

SECTION 13 - DISPOSAL CONSIDERATIONS

WASTE DISPOSAL INFORMATION	No special method. Observe all applicable Federal/ Provincial/ State regulations and Local/ Municipal ordinances regarding disposal of non-hazardous materials.

SECTION 14 - TRANSPORTATION INFORMATION

US DOT INFORMATION	Not applicable.
CANADIAN SHIPPING NAME	SDA GENERIC LAUNDRY PRESPOTTER
TDG CLASSIFICATION	Not applicable.
PIN/NIP	Not applicable.
PACKING GROUP	Not applicable.
EXEMPTION NAME	Not applicable.

SECTION 15 - REGULATORY INFORMATION

WHMIS CLASSIFICATION	Not applicable.

SECTION 15 - REGULATORY INFORMATION (continued)

All ingredients of this product are listed or are excluded from listing on the U.S. Toxic Substances Control Act (TSCA) Chemical Substance Inventory.

All ingredients in this product comply with the New Substances Notification requirements under the Canadian Environmental Protection Act (CEPA).

This product is not subject to the reporting requirements under California's Proposition 6

SECTION 16 - OTHER INFORMATION

ADDITIONAL INFORMATION. Use as directed.
EPA REGISTRATION #..... Not applicable.

PREPARATION INFORMATION

PREPARED BY..... Manufacturer's Technical Support Department. Refer to page 1 (Manufacturer) for contact information.

This document has been prepared using data from sources considered technically reliable. It does not constitute a warranty, express or implied, as to the accuracy of the information contained herein. Actual conditions of use and handling are beyond seller's control. User is responsible to evaluate all available information when using product for any particular use and to comply with all Federal, State, Provincial and Local laws and regulations.
PRINT DATE: 23Jul1998

PROTEASE ENZYME POWDER

ENZYME MATERIAL SAFETY DATA SHEET

SECTION I - CHEMICAL PRODUCT AND COMPANY IDENTIFICATION

Creation Date: 12/96
Review Date:

Manufacturer:
NOVO NORDISK BIOCHEM NORTH AMERICA, INC.
State Road 1003, Box 576
Franklinton, NC 27525

Information Phone Number: (919) 494-3000
Chemtrec Number: (800 424-9300

Commercial Product Name: Savinase® Standard

Chemical Characterization: Enzyme preparation

SECTION II - COMPOSITION AND INFORMATION ON INGREDIENTS

CAS Number and Name: subtilisin, 9014-01-1

Color: Off-white to brown Form: Powder Odor: Characteristic odor

Hazardous ingredients: Protease

TLV (OSHA): 0.00006 mg/m3 for subtilisin (as 100% pure protease)

SECTION III - HAZARD IDENTIFICATION AND FIRST AID PROCEDURES

INHALATION: May cause sensitization by inhalation in hypersensitive individuals. Avoid dust generation. If inhaled, remove from contaminated area to fresh air. Report situation. Seek medical attention if allergic response exhibited.

EYE CONTACT: Irritating to eyes. Avoid contact with eyes. In case of contact with eyes, flush eyes with low pressure water for at least 15 minutes. If irritation persists, seek medical attention.

SKIN CONTACT: Irritating to skin. Avoid contact with skin. In case of contact with skin, wash skin with soap and water. Remove contaminated clothing and wash.

SWALLOWING: Irritating to mouth and throat. If swallowed, rinse mouth and throat thoroughly with tap water.

SECTION IV - FIRE FIGHTING MEASURES

Flash Point/Ignition Temperature : HMIS Rating: Health = 1
Flammability = 1
Reactivity = 0

Explosion Characteristics: Not applicable Hazardous Decomposition Products: None

Suitable Fire Extinguishing Media: Water, foam, halones.

SECTION V - ACCIDENTAL RELEASE MEASURES

AFTER SPILLAGE:

SPILLED PRODUCT SHOULD BE REMOVED IMMEDIATELY TO AVOID FORMATION OF DUST. Take up by mechanical means (ie. vacuuming). Dilute remainder with plenty of water (avoid formation of aerosols). Provide for sufficient ventilation. Wash contaminated clothing.

FIRST AID:

In case of contact with skin, wash with plenty of water. If symptoms occur, see a doctor. In case of contact with eyes, rinse with plenty of water for at least 15 minutes and see an eye specialist. In case of inhalation, drink water. If symptoms occur, see a doctor.

SECTION VI - PERSONAL PROTECTION/HANDLING AND STORAGE

TECHNICAL PROTECTIVE MEASURES:

AVOID FORMATION OF DUST. Avoid splashing and high pressure washing. Provide for good ventilation of the room, when handling this product. Store container in a dry cool place.

RECOMMENDED PERSONAL PROTECTIVE EQUIPMENT:

RESPIRATORY PROTECTION:	None required under usual conditions of use. However, if exposure potential exists, refer to NIOSH Criteria Guides to determine appropriate unit.
HAND PROTECTION:	Impermeable gloves
EYE PROTECTION:	Protecting glasses or eye shield
INDUSTRIAL HYGIENE:	Maintain good conditions of industrial hygiene.
PROTECTION AGAINST FIRE AND EXPLOSIONS:	Under normal use, no special requirements. If extremely high levels generate in ambient air, material can support combustion.

*Additional information and health/safety information is available in Novo Nordisk's "How to Handle Powdered/Granulated Novo Nordisk Enzymes Safely".

SECTION VII- PHYSICAL PROPERTIES

Solubility in Water:	Readily soluble
Alternative Solvent:	Not applicable
pH Value (1% sol.):	6.0 - 9.0

SECTION VIII - TOXICOLOGICAL INFORMATION

Product is irritating to the eyes. Inhalation of dust may cause respiratory allergy in susceptible individuals. Prolonged skin contact may cause minor irritation. Oral rat LD-50 > 2g/kg classifies product as "non-toxic".

Carcinogenicity: NTP? No IARC Monographs? No OSHA Regulated? No

SECTION IX - INFORMATION ON ECOLOGICAL EFFECTS

Appendix E. Specifications for Calmar Dispensing Systems TS800 Standard Trigger Sprayer

UNCONTROLLED COPY

Calmar Inc. dispensing systems

Finished Item Specification for TS800 - Standard

1. PURPOSE

This document defines the final specifications of the standard TS800 Trigger Sprayers.

2. SCOPE

This specification applies to all standard TS800 Trigger Sprayers.

3. POLICY

All materials and components will conform to the appropriate specifications and requirements outlined below. Note: Special requirements will be called out on the workorder per the customer's request. To ensure compliance, Inspection personnel will test trigger sprayers using the test methods listed below and inspect trigger sprayers against criteria included in the Classification of Defects.

4. DEFINITIONS

Not Applicable

5. REFERENCES

CS410501	*Molded Item Nozzle Specification*
CS411301	*Molded Item Piston Specification*
CS412201	*Purchased Item Spring Specification*
CS412601	*Molded Item Closure Specification*
CS412901	*Extruded Item Tube Specification*
CS413201	*Molded Item Trigger Specification*
CS415101	*Molded Item Discharge Valve Specification*
CS417901	*Molded Item Valve Body Specification*
CS418301	*Molded Item Shroud Specification*
CS419701	*Molded Item Tube Retainer/Ball Seat Specification*
CSXX2001	*Purchased Item Valve Ball Specification*
CSXX2303	*Purchased Item Specification for Stainless Steel Ball Valves*
CSXX3901	*Purchased Item Gasket Specification*
CXXMTF08	*Calmar Approved Materials List*
L41QAT01	*TS800 Product Inspection Reference*
PD04100	*TS800 General Specification Drawing*
PSXX0001	*Finished Product Packing Specification*

6. SPECIFICATIONS

Type	Requirement	References
Materials of Construction	• All materials of construction are outlined in the Calmar Approved Materials list.	CXXMTF08
Components	• All components will be produced in accordance with the Component Specifications listed in Section 5 of this document.	
Style, Design & Construction	• The TS800 Trigger Sprayer will conform in style, design, and construction to the current revision of the Calmar General Specification Drawing	PD04100
	• Closures The closure shall be fully fitted onto the valve body and will turn without excessive interference and/or drag.	TMXXXX66
	• Tube Insertion: – for units <u>not</u> using the "Anti-Blow-Out" tube retainer will be no less than .312" (10/32) and no more than .532" (17/32). – for units using the "Anti-Blow-Out" tube retainer, part # 006203, will be no less than .406" (13/32) and no more than .594" (19/32). Units	TMXXXX15
	• Tube Length: – for units <u>not</u> using the "Anti-Blow-Out" tube retainer will be measured, with the tube fully extended, from the bottom surface of the retainer flange and tubes will be cut to the specified nominal within ± 1/16". – for units using the "Anti-Blow-Out" tube retainer, part # 006203, will be measured, with the tube fully extended, from the bottom surface of the gasket and tubes will be cut to the specified nominal within ± 1/16".	TMXX2901
	• Tube Cuts will be cut at an angle to the longitudinal axis to allow unimpaired delivery with the tube touching the container wall.	
	• Nozzle/Valve Body Fit requires that the nozzle be fully-fitted onto the valve body without distortion and with no visible gap between the nozzle and the shroud.	
	• Gasket Fit requires that the gasket fit snugly against the retainer and shall be retained above the tube retainer flange.	
	• Anti-Blowout Tube Retainer configuration requires that the gasket is held into place by the crimped flange.	
	• Trigger/Valve Body Fit requires that the trigger be fully fitted at the two points onto the valve body and be free of unrestricted movement when in the REST position. When actuated, the trigger should return without resistance.	
	• Tube Retainer/Valve body Fit The tube retainer shall be inserted into the valve body, and the tube retainer flange shall be no more than .030 from valve body receptacle.	TM419701
	• Tube Retention will withstand an instantaneous direct pull of no less than five pounds.	TMXXXX65

Type	Requirement	References
Style, Design & Construction	• **Foamer-Attachment Fit** requires that the foamer attachment be fully fitted into the nozzle, and be free of unrestricted movement when switching from SPRAY to FOAM positions. • **Lubricant** The quantity of lubricant used shall be the minimum needed to accomplish the intended purpose. • **Freedom from Foreign Matter** The sprayer shall be free of foreign matter including, but not limited to: grease, dirt, lint, chaff, debris, and plastic chips. • **Workmanship** must be first class throughout the process to ensure that the trigger sprayer is free of any defect that will affect its quality image.	
Functional Tests	• **Actuation Force** is not specified. • **Strokes-to-Prime**, tested at 90 strokes per minute, shall occur prior to the tenth stroke. Tubes longer than 12" will take more strokes to prime than shorter tubes. • **Output-per-Stroke**, tested in the spray position at 90 strokes per minute, will produce an average output-per-stroke of no less than .75 milliliter. • **Spray/Stream Pattern**, when tested in the SPRAY position at a distance of approximately 8 inches, will be a nearly circular pattern of no less than four inches in diameter; when tested in the STREAM position at approximately 8 inches, the trigger sprayer should produce pattern that is noticeably narrower than the pattern produced in the spray position. • **Leakage**: – **During Actuation**, shall not incur one falling drop from sprayer during 10 continuous strokes. – **Static**: at 3 psig shall not incur one falling drop in 10 seconds.	 TMXXXX05 TMXXXX37 TMXXXX05 TMXXXX05 TMXXXX09
Packing, Shipping & Storage	• **Liners** (one-mil polyethylene) used to store freshly assembled trigger sprayers must be clean and, when filled, should be folded so as to prevent entrance of foreign matter during routine handling and storage. • **Cartons** will be of a design and construction sufficient to ensure the protection of finished product during handling, storage, and delivery. • **Packing** Finished assemblies will be packed in accordance with the applicable Packing Specification	 PSXX0001

Type	Requirement	References
	• Markings will be applied by means of a gummed label placed in the printed square in the lower right corner of one of the container's end panels. Each label will indicate: • Calmar Sales Order No and Customer P.O. No • Calmar Item Description (e.g., TS800) • Closure Size and Description • Quantity • Tube Length • Customer Part Number. Note: Containers being shipped to California will include the following warning: **Warning: This product contains a chemical known to the State of California to cause cancer.** The carton will be free of any ambiguous or contradictory markings.	

Appendix F. Target Prewash Standard Operating Procedure

STANDARD OPERATING PROCEDURE

FABRIC PRE-WASHING PROCEDURES FOR THE CHARACTERIZATION OF CONSUMER SPRAY PRODUCT

Originated by: _____ Date: 7-10-98
J. Y. Ding, Principal Research Scientist

Approved by: _____ Date: 7/10/98
W. C. Forsythe, Technical Reviewer

Approved by: _____ Date: 7-10-98
J. R. Decker, Jr., Technical Center Manager

Reviewed and Registered by QAU:
_____ Date: 7/10/98

Battelle
Preclinical Drug Development
Northwest Operations
LSL II Building, 900 Battelle Blvd.
Richland, Washington 99352

TABLE OF CONTENTS

I. SCOPE/PURPOSE

This Standard Operation Procedure (SOP) describes the procedures for the fabric per-washing specifications of the characterization of a consumer spray product by the Bioengineering and Aerosol Technology Group in Battelle, Northwest Operations.

II. REFERENCES

(1) Battelle Study Protocol N003043A
(2) EPA Good Laboratory Practices Regulations (40 CFR, PART 792)

III. DEFINITIONS

Washing machine is General Electric Heavy Duty extra large capacity, and the model number is WWA8360 GAL WH (Serial Number: TSI 57043G)

IV. PROCEDURES

1. Rinsing the Washing Machine

Materials:
(1) GE heavy duty washing machine
(2) Calibrated Thermometer (ERTCO ASTM 12C-FC)

Procedures:
(1) Check the outside of the washing machine so that the machine is clean of detergent residue and other dirt.
(2) Set water level at "extra high level", and the temperature level at the "hot water".
(3) After filling the machine with water, measured the water temperature and then record the data. (The rinsing temperature is controlled at 130°F (+/-) 10°F).
(4) Agitate the washing machine for 2 minutes and then drain the water from the washing machine.
(5) Check the washing machine to make sure that all visible residues are removed.
(6) Repeat the step (3) to (5) if necessary.

2. Rinsing the Washing Procedures

Materials:
(1) GE heavy duty washing machine
(2) Polyester/cotton blend fabric supplied by SDA (65/35/ Khaki 45", Textile Innovators Corp.)
(3) Detergent supplied by SDA (Ultra "all" Free Clear Laundry Detergent, Lever Brothers Co.)
(4) Balance (Mettler PE 6000)
(5) Calibrated thermometer (ERTCO ASTM 12C-FC)

Procedures:
(1) Choose the normal cycle on the washing machine and set the machine at "extra high" water level.
(2) Set the "hot water" temperature for washing (130°F (+/-) 10°F), and "cold water" temperature for rinsing (70°F (+/-) 10°F),
(3) Check the Calibration of the balance with two sets of standard weights (100g, 2000g).
(4) Weigh out 139.1 gram of SDA supplied detergent using the balance.
(5) Add the detergent as the water is filling the machine.
(6) Weigh out approximately 3400g (7.5 pounds) of the fabric provided by SDA (1pound is about 453.6 grams).

(7) Measure the water temperature with the thermometer and record the data after water has stopped filling the machine.
(8) Put the fabric into water and start washing.
(9) Allow the machine to proceed through the entire rinsing cycle at the "cold water" temperature setting.
(10) Repeat the step (3) to (9) for a total of 5 cycles.
(11) Rinse one more time after the washing machine completes 5 washing cycles, and then observe the rinse water, which should be clean and free of suds.
(12) If there is still suds in the water, repeat step (11) and (12) to eliminate residual suds.

3. Drying Procedures

(1) Line dry the fabric after the completion of the washing cycle.

Washing Machine Model # WWA8360 GAL WH Serial # TSI 57043G
Detergent ID #:_____ Cloth ID #:_____

Cloth Load # 1 — Date: _____ Initial: _____

Wash Number	Cloth Weight	Detergent Weight	Wash Cycle Temp (Hot)	Rinse Cycle Temp (Cold)
1	kg	g	°C	°C
2		g	°C	°C
3		g	°C	°C
4		g	°C	°C
5		g	°C	°C
			Extra rinse	°C

Cloth Load # 2 — Date: _____ Initial: _____

Wash Number	Cloth Weight	Detergent Weight	Wash Cycle Temp (Hot)	Rinse Cycle Temp (Cold)
1	kg	g	°C	°C
2		g	°C	°C
3		g	°C	°C
4		g	°C	°C
5		g	°C	°C
			Extra rinse	°C

Cloth Load # 3 — Date: _____ Initial: _____

Wash Number	Cloth Weight	Detergent Weight	Wash Cycle Temp (Hot)	Rinse Cycle Temp (Cold)
1	kg	g	°C	°C
2		g	°C	°C
3		g	°C	°C
4		g	°C	°C
5		g	°C	°C
			Extra rinse	°C

Cloth Load # 4 — Date: _____ Initial: _____

Wash Number	Cloth Weight	Detergent Weight	Wash Cycle Temp (Hot)	Rinse Cycle Temp (Cold)
1	kg	g	°C	°C
2		g	°C	°C
3		g	°C	°C
4		g	°C	°C
5		g	°C	°C
			Extra rinse	°C

Balance ID#: _____ Cal exp date: _____

Calibration Wt. Set (1g-1kg) ID # 442-86-02-022 Exp: 4/28/99

	Actual	Measured
Cal Wt.	g	g
Cal Wt.	g	g
Cal Wt.	g	g

Comments: All Cloth to be line dried after washing cycle.

Appendix G. Test Conduct Standard Operating Procedure

STANDARD OPERATING PROCEDURE

MEASUREMENT AND CHARACTERIZATION OF AEROSOLS GENERATED FROM A CONSUMER SPRAY PRODUCT – PHASE II

Originated by: W C Forsythe Date: 5/21/99
W. C. Forsythe, Research Scientist

Approved by: M L Clark Date: 5/24/99
M. L. Clark, Senior Research Scientist, Technical Reviewer

Approved by: J R Decker, Jr. Date: 6/1/99
J. R. Decker, Jr., Technical Center Manager

Reviewed and Registered by QAU:

_____ Date: _____

Battelle
Northwest Toxicology Operations
LSL II Building, 900 Battelle Blvd.
Richland, Washington 99352

TABLE OF CONTENTS

I. SCOPE/PURPOSE

This Standard Operation Procedure (SOP) describes the procedures necessary for conduction of the study " Measurement and Characterization of Aerosols Generated from a Consumer Spray Product - Phase II" by the Bioengineering and Aerosol Technology Group in Battelle.

II. REFERENCES

(1) Battelle Study Protocol N003043A
(2) Aerosizer Operation Manual (Amherst Process Instrument, Inc.)
(3) EPA Good Laboratory Practices Regulations (40 CFR, PART 792)

III. DEFINITIONS

Cloth target : Polyester/cotton blend fabric (18"x18" square) mounted to 20"X20" square plastic-backed absorbent paper. Align the top edges of the fabric squares to the top edge of the absorbent paper and attach using standard staples at intervals around the perimeter of the cloth. These cloth targets are to be attached ¼" dowel using small binder clips prior to weighing.

IV. PROCEDURES

All tests will be conducted at room temperature maintained between 70 and 85 ^{o}F and relative humidity maintained between 25 and 50%. Room temperature and relative humidity will be recorded prior to the start of each test. All test material will be allowed to equilibrate to room temperature prior to the start of testing.

All tests will be conducted in the same test chamber. During sampling, the chamber will be closed and have no active airflow other than that created by drawing the samples.

1. SPRAY NOZZLE CHARACTERIZATION

A. Total Mass Output and Spray Pattern

Materials:

(1) Cloth targets
(2) Balance (Mettler PE 6000)
(3) SDA-generic Prespotter control (test article without Enzyme)
(4) Spray Actuator #4

Procedures:

(1) Set up the experimental configuration as vertical target shown in Figure 1 below.
(2) Weigh a prepared cloth target with hanging rod attached, and also weigh the control article container.
(3) Hang the target in the vertical configuration.
(4) Apply a uniform force to spray **5 times** into the cloth.
(5) Measure the diameter of spray pattern, and record any irregular shape.
(6) Weigh the container and cloth separately using the balance.
(7) Repeat steps (3) to (6) for a total of **three** times.
(8) Compare the results of this test to results obtained for this spray actuator during the Pilot Study.
(9) If the spray characteristics have changed significantly, notify the Study Director, who will in turn notify the SDA.

(10) Test a similar trigger sprayer following the steps outlined above.

2. HIGH VOLUME PRODUCT EVALUATION PROCEDURE

Materials:

(1) Aerosizer (API) connected to the API AERODILUTER
(2) **Cloth targets**
(3) SDA-provided prototype laundry product
(4) Balance (Mettler PE 6000)
(5) Whatman GF/C glass fiber filter pads
(6) Hi-vol sample system and filter holder assembly

Procedures:

(1) Set up the sample table and determine the sample location for the vertical target, the container, and filter sampler port as displayed in Figures 1 and 2.
(2) Calibrate the balance with three different weights (10g, 500g, 2000g).
(3) Close the test chamber door and check that the HEPA system is off.
(4) Set up the experimental configuration as vertical target shown in Figure 1 below.
(5) Weigh 6 prepared cloth targets with hanging rods attached in the plastic tray.
(6) Weigh the Test article with Enzyme container.
(7) Hang the targets in the vertical configuration.
(8) Prepare the hi-vol filter by assembling the filter pad within the holder and positioning the filter sample port as shown in Figures 1 and 2. Using an appropriate rule to measure the distance according to the specifications shown in Figure 1 and 2.
(9) Record the pressure drop across the inline orifice. The approximate flow will be derived, based on filter pressure drop and flow verification conducted for the sampling system.
(10) Turn on the HEPA filtered fan system to purge the chamber for at least 5 minutes, then turn off the filter system. Allow at least 1 minute for the booth air to settle prior to initiating background measurements.
(11) Turn on the API to measure the background of room air for **5 minutes** using a sampling period of 30 seconds. If the particle concentration exceeds 1500 particles/cm^3, repeat step (10) until the concentration is below 1500 particles/cm^3.
(12) Set up the API to sample continuously for **13 minutes** at a sampling rate of **30 seconds**. A total of 24 samples takes approximately 13 minutes to complete therefore this will be the sample time used for the tests.
(13) A complete CONTROL run will be conducted as the first sample run during the High Volume Product Evaluation Procedure only. The technician will mimic the spray activity for a complete set of targets and initiate the API and hi-vol sampling as in steps (14) and (15).
(14) Turn on the API **and the hi-vol filter sampler**, and record the starting time. After one minute, apply a uniform force to deliver 5 sprays to the target at a rate of one stoke per second. Place the targets with the backing paper in the plastic tray, and minimizing motion when moving the targets. Wait for 10 seconds between targets, and then repeat for completion of six targets.
(15) Wait until the API **and the hi-vol filter sampler** finish the sampling procedure (~11 minutes after spray cessation), and then weigh the container and six targets in the plastic tray, record the data.
(16) Record the temperature and humidity in the chamber as well as the study information.
(17) During the weighing and data recording tasks, flush the chamber with clean air by turning on the HEPA system for at least 5 minutes.
(18) Repeat the steps from (5) to (16) for a total of five times.
(19) Submit all filter samples to Clinical Chemistry for ELISA analyses.

Note: During the measurement task (i.e., both the API and filter sampler are on), it is important to limit the personnel and minimize all unnecessary movement in the test chamber.

The following is the timeline for the experiment procedure:

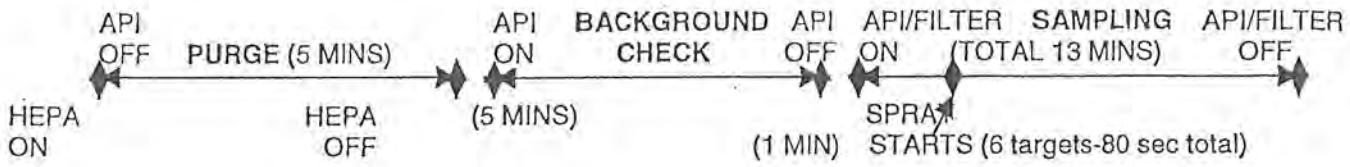

3. LOW VOLUME PRODUCT EVALUATION PROCEDURE

Materials:

(1) Aerosizer (API) connected to the API AERODILUTER
(2) Cloth targets
(3) SDA-provided prototype laundry product
(4) Balance (Mettler PE 6000)
(5) Whatman 47 mm GF/C glass fiber filter pads
(6) 47 mm filter holder assembly

Procedures:

(1) Set up the sample table and determine the sample location for the vertical target, the container, and filter sampler port as displayed in Figures 1 and 2.
(2) Calibrate the balance with three different weights (10g, 500g, 2000g).
(3) Close the test chamber door and check that the HEPA system is off.
(4) Set up the experimental configuration as vertical target shown in Figure 1 below.
(5) Weigh 6 prepared cloth targets with hanging rods attached in the plastic tray.
(6) Weigh the Test article with Enzyme container.
(7) Hang the targets in the vertical configuration.
(8) Prepare the lo-vol filter by assembling the filter pad within the holder and positioning the filter sample port as shown in Figures 1 and 2. Using an appropriate rule to measure the distance according to the specifications shown in Figure 1 and 2.
(9) Adjust the flow meter until the pressure drop indicated on the gauge is near 32 to 40 inches of HOH. The flow value is between 18 and 21L/min for this pressure drop.
(10) Turn on the HEPA filtered fan system to purge the chamber for at least 5 minutes, then turn off the filter system. Allow at least 1 minute for the booth air to settle prior to initiating background measurements.
(11) Turn on the API to measure the background of room air for 5 minutes using a sampling period of 30 seconds. If the particle concentration exceeds 1500 particles/cm3, repeat step (10) until the concentration is below 1500 particles/cm3.
(12) Set up the API to sample continuously for 13 minutes at a sampling rate of 30 seconds. A total of 24 samples takes approximately 13 minutes to complete therefore this will be the sample time used for the tests.
(13) A complete CONTROL run will be conducted as the first sample run during the Low Volume Product Evaluation Procedure only. The technician will mimic the spray activity for a complete set of targets and initiate the API and lo-vol sampling as in steps (14) and (15).
(14) Turn on the API and the lo-vol filter sampler, and record the starting time. After one minute, apply a uniform force to deliver 5 sprays to the target at a rate of one stoke per second. Place

the targets with the backing paper in the plastic tray, and minimizing motion when moving the targets. Wait for 10 seconds between targets, and then repeat for completion of six targets.

(15) Wait until the API and the lo-vol filter sampler finish the sampling procedure (~11 minutes after spray cessation), and then weigh the container and six targets in the plastic tray, record the data.

(16) Record the temperature and humidity in the chamber as well as the study information.

(17) During the weighing and data recording tasks, flush the chamber with clean air by turning on the HEPA system for at least 5 minutes.

(18) Repeat the steps from (4) to (16) for a total of five times.

(19) Submit all filter samples to Clinical Chemistry for ELISA analyses.

Note: During the measurement task (i.e., both the API and filter sampler are on), it is important to limit the personnel and minimize all unnecessary movement in the test chamber.

The following table shows the API data file-naming convention used to identify High Volume Product Evaluation Procedure (HVPEP) test groups.

Sprayer ID	Vertical Target	
	Sample (time)	API File Name
Trigger Spray 4	B-G (5mins)	HVPEP-B1
(or equivalent)	Test 1 (12.5mins)	HVPEP-T1
	B-G (5mins)	HVPEP -B2
	Test 2 (12.5mins)	HVPEP -T2
	B-G (5mins)	HVPEP -B3
	Test 3 (12.5mins)	HVPEP -T3
	B-G (5mins)	HVPEP -B4
	Test 4 (12.5mins)	HVPEP -T4
	B-G (5mins)	HVPEP -B5
	Test 5 (12.5mins)	HVPEP -T5

B-G: Background check.

The following table shows the API data file-naming convention used to identify Low Volume Product Evaluation Procedure (LVPEP) test groups.

Sprayer ID	Vertical Target	
	Sample (time)	API File Name
Trigger Spray 4	B-G (5mins)	LVPEP-B1
(or equivalent)	Test 1 (12.5mins)	LVPEP-T1
	B-G (5mins)	LVPEP -B2
	Test 2 (12.5mins)	LVPEP -T2
	B-G (5mins)	LVPEP -B3
	Test 3 (12.5mins)	LVPEP -T3
	B-G (5mins)	LVPEP -B4
	Test 4 (12.5mins)	LVPEP -T4
	B-G (5mins)	LVPEP -B5
	Test 5 (12.5mins)	LVPEP -T5

B-G: Background check.

4. FLUSH SYSTEM VERIFICATION

Materials:

(1) Aerosizer (API) connected with the API AERODILUTER.
(2) Cloth Targets
(3) SDA-provided Test Material
(4) Balance (Mettler PE 6000)

Procedures:

(1) Set up the sample table and determine the sample location for vertical target as well as the container six inches away from the target as depicted in Figures 1 and 2.

The timeline for this test is:

(2) 5 minute flush using the HEPA filtered system follow step 10 of procedure 2 and 3.
(3) Initiate 13 minute filter and API sample collection BEFORE spray event data with NO activity in the booth.
(4) 5 minute flush using the HEPA filtered system follow step 10 of procedure 2 and 3.
(5) Initiate 13 minute filter and API sample collection DURING spray event data
(6) Follow steps 12 through 16 of procedures 2 and 3 for collection of the DURING spray event data.
(7) 5 minute flush using the HEPA filtered system follow step 10 of procedure 2 and 3.
(8) Initiate 13 minute filter and API sample collection AFTER spray event data with NO activity in the booth.

Figure 1. Side View of Relative Orientation of Table, Trigger Sprayer, Vertical Target, and Sampler Ports (Aerosizer and Filter)

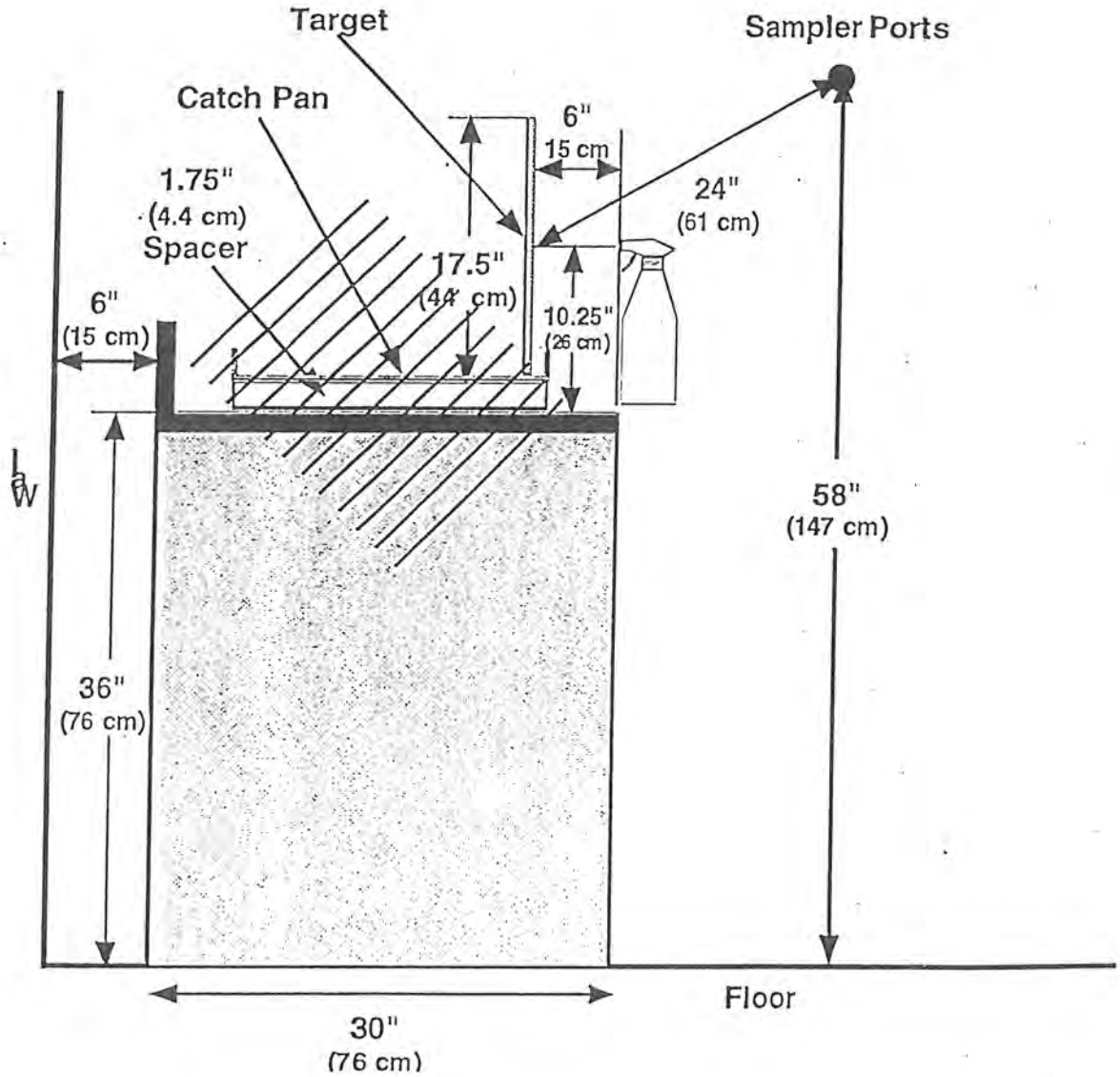

Figure 2. Top View of Relative Orientation of Table, Trigger Sprayer, Vertical Target, Sampler Ports (Aerosizer and Filter)

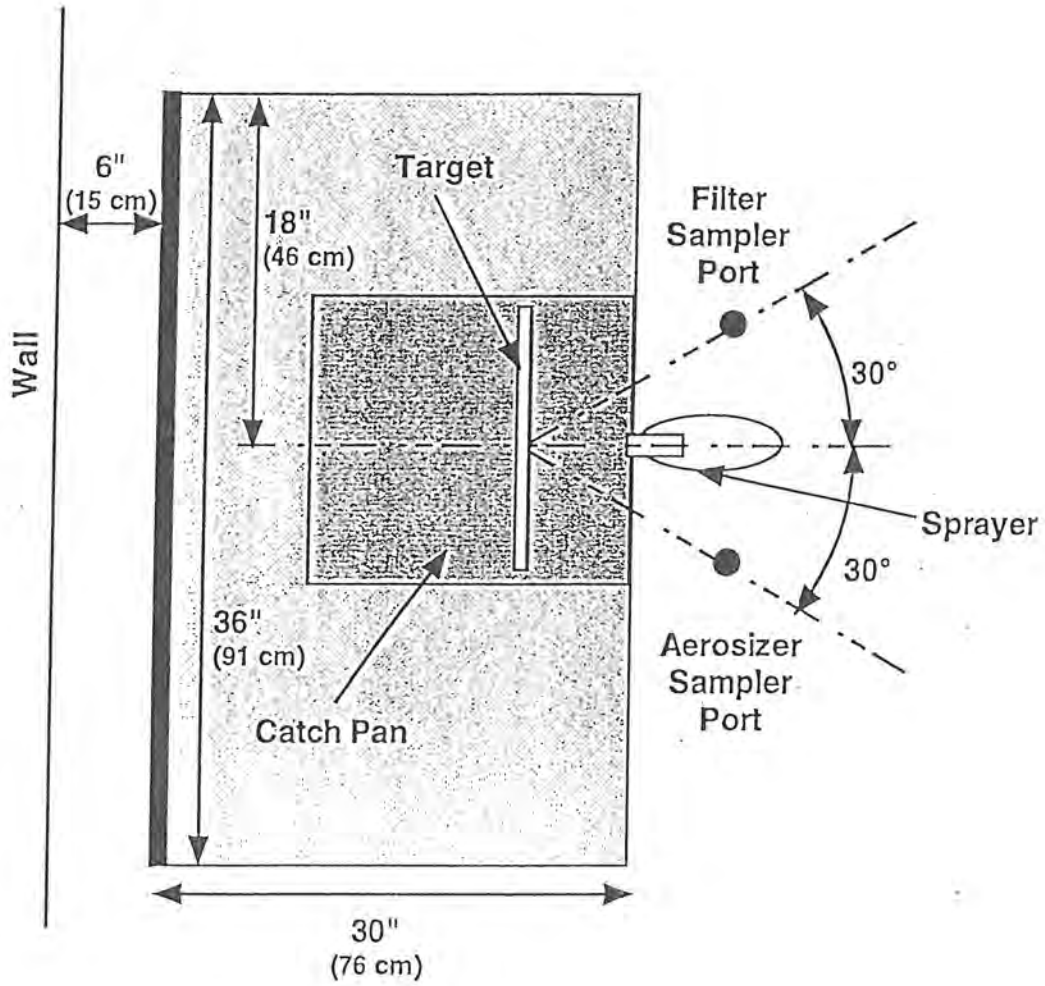

Appendix H. Original Test Data Summaries – Low Volume Product Evaluation Procedure

Date: 12-14-99
Initials: [illegible]

Soap & Detergent Association - Spray Calculations - Low Volume Product Evaluation Procedure (Original Run Data)

Filter Results via ELISA Analysis of Enzyme Content

Test ID: Description	LVPEP Control ng/ml	LVPEP Rep 1 ng/ml	LVPEP Rep 2 ng/ml	LVPEP Rep 3 ng/ml	LVPEP Rep 4 ng/ml	LVPEP Rep 5 ng/ml	
LVPEP Control LoVol Sampler - Spraying Protocol	0.00	1.73	2.09	1.84	2.43	4.04	
LVPEP Rep 1 LoVol Sampler - Spraying Protocol		1.64	1.99	1.66	2.53	3.26	
LVPEP Rep 2 LoVol Sampler - Spraying Protocol							
LVPEP Rep 3 LoVol Sampler - Spraying Protocol							
LVPEP Rep 4 LoVol Sampler - Spraying Protocol							
LVPEP Rep 5 LoVol Sampler - Spraying Protocol							
	0.00	1.69	1.99	1.75	2.53	3.65	Mean
	----	0.064	0.071	0.127	0.071	0.552	St Dev
	----	3.8%	3.6%	7.3%	2.8%	15.1%	% CV

The mass of enzyme collected on filters was (ref: Memo-KD 5/9/99):

	LVPEP Control	LVPEP Rep 1	LVPEP Rep 2	LVPEP Rep 3	LVPEP Rep 4	LVPEP Rep 5	
Lo vol method:	10	10	10	10	10	10	ml
	0	1.69	1.99	1.75	2.53	3.65	ng/ml = avg conc of enzyme in solution
	0	16.9	19.9	17.5	25.3	36.5	ng collected

Aerosizer Results

-->Run ID:	LVPEP Control	LVPEP Rep 1	LVPEP Rep 2	LVPEP Rep 3	LVPEP Rep 4	LVPEP Rep 5	Average Rep	
Time (min)	Mass Loading mg/m^3	Mass Loading mg/m^3	Mass Loading mg/m^3	Mass Loading mg/m^3	Mass Loading mg/m^3	Mass Loading mg/m^3	Mass Loading mg/m^3	
0	0.000225	0.0002	0.0003	0.0003	0.0002	0.0002	0.0002	
0.5	0.000435	0.0002	0.0003	0.0004	0.0004	0.0003	0.0003	
1.1	0.000511	0.0002	0.0003	0.0004	0.0003	0.0003	0.0003	
1.6	0.000314	0.0649	0.1950	0.3350	0.0560	0.7730	0.2648	
2.2	0.000368	0.1130	1.0700	0.4310	0.7390	2.8600	1.0426	
2.7	0.00041	0.1160	0.2980	0.9520	0.9460	1.9000	0.8424	
3.3	0.000525	0.1320	0.1720	0.2990	0.4260	0.7310	0.3526	
3.8	0.000554	0.0656	0.2570	0.3110	5.3200	1.2800	1.4507	
4.3	0.000522	0.1080	1.2900	0.2330	1.7500	1.3000	0.9362	
4.9	0.000435	0.0416	0.5330	0.3160	0.5420	0.3890	0.3643	
5.4	0.000474	0.0193	0.5790	0.3580	1.7000	0.3370	0.5997	
6.0	0.000434	0.0086	0.7600	0.1810	0.2230	0.4130	0.3171	
6.5	0.000503	0.0196	2.3700	0.1450	0.1140	0.2710	0.5839	
7.0	0.00041	0.0020	0.1720	0.0981	0.1040	0.3480	0.1448	
7.6	0.00053	0.0091	0.1850	0.0801	0.0606	0.1720	0.1020	
8.1	0.000532	0.0020	0.2410	0.1550	0.0831	0.0389	0.1030	
8.7	0.000424	0.0106	0.1180	0.1970	0.0550	0.0643	0.0890	
9.2	0.000496	0.0025	0.0451	0.0117	0.0836	0.0346	0.0355	
9.8	0.000539	0.0037	0.0435	0.0497	0.0260	0.0562	0.0362	
10.3	0.0005	0.0006	0.0272	0.0119	0.0253	0.0434	0.0217	
10.8	0.000531	0.0007	0.0374	0.5680	0.0257	0.0369	0.1337	
11.4	0.000676	0.0013	0.0109	0.0074	0.0019	0.0207	0.0083	
11.9	0.000522	0.0016	0.0249	0.0048	0.0109	0.0524	0.0189	
12.5	0.000663	0.0013	0.0035	0.0020	0.0083	0.0139	0.0057	
13.0	0.000557	0.0007	0.0012	0.0039	0.0015	0.0178	0.0050	
Avg ML:	0.0005	0.0293	0.3375	0.1901	0.4921	0.4461	0.2991	mg/m^3
	0.5	29.3	337.5	190.1	492.1	446.1	299.1	ng/l

-->Run ID:	LVPEP Rep 1	LVPEP Rep 2	LVPEP Rep 3	LVPEP Rep 4	LVPEP Rep 5	Average
Time (min)	Mean Particle Size microns	Mean Particle Size microns	Mean Particle Size microns	Mean Particle Size microns	Mean Particle Size microns	Mean Particle Size microns
0	1.23	1.31	1.28	1.55	1.17	1.31
0.5	1.19	1.21	1.45	1.31	1.25	1.28
1.1	1.18	1.21	1.30	1.39	1.37	1.29
1.6	9.41	11.61	11.78	11.52	13.46	11.56
2.2	10.29	14.90	12.75	14.56	14.21	13.34
2.7	10.23	12.74	14.48	14.88	13.70	13.21
3.3	11.73	12.76	15.23	15.23	15.64	14.12
3.8	10.94	13.36	14.29	19.27	17.03	14.98
4.3	11.64	18.39	90.88	18.29	16.08	31.06
4.9	8.38	16.63	15.09	17.48	13.83	14.26
5.4	7.36	16.47	15.58	17.99	13.75	14.23
6.0	6.34	15.67	15.16	14.47	13.49	13.03
6.5	7.14	18.05	12.84	12.09	12.94	12.81
7.0	3.53	14.61	12.50	12.54	11.93	11.02
7.6	6.40	14.41	12.99	10.61	12.03	11.29
8.1	3.41	15.17	10.96	10.71	6.96	9.44
8.7	4.65	13.56	10.43	9.72	9.28	9.59
9.2	2.85	9.51	5.62	13.01	7.04	7.60
9.8	3.50	9.68	9.34	10.55	8.48	8.37
10.3	1.36	7.93	6.11	8.53	7.29	6.24
10.8	1.36	10.86	11.09	8.02	8.05	7.87
11.4	2.35	6.25	5.29	1.45	5.93	4.25
11.9	2.36	10.20	4.33	5.67	7.06	5.92
12.5	1.34	4.94	2.85	5.64	5.77	4.11
13.0	1.31	1.66	3.99	7.21	5.78	3.99

Data Analysis

According to the calibration data, the following sampling rates apply:

			Time (min)	Vol Sample	
Hi Vol:	260.36 lpm =	4.34 lps	13.0	3384.68	liters
Low Vol:	18.01 lpm =	0.30 lps	13.0	234.13	liters

Ratio Sample Vols
HiVol/LoVol
14.5 :1

Time-weighted average conc derived from filter samples: (mass/(vol flow rate*time))

	LVPEP Control	LVPEP Rep 1	LVPEP Rep 2	LVPEP Rep 3	LVPEP Rep 4	LVPEP Rep 5
ng/l	0.000	0.072	0.085	0.075	0.108	0.156
ng/m^3	0.000	71.969	84.996	74.745	108.060	155.896

Aerosol mass determined from API data: (conc*vol flow*time)
(note: API flow = 2 lpm, T actual = 12.90 min)

	LVPEP Control	LVPEP Rep 1	LVPEP Rep 2	LVPEP Rep 3	LVPEP Rep 4	LVPEP Rep 5
Total Mass (ng):	13	770	8707	4904	12697	11509

Ratio of API Total Mass Conc to Filter-derived Enzyme Conc:

LVPEP Control	LVPEP Rep 1	LVPEP Rep 2	LVPEP Rep 3	LVPEP Rep 4	LVPEP Rep 5
-------	415	3971	2543	4554	2861

Enzyme TNVA conc derived from API sample data:

	Conc (mg/m^3)	Enz/product (mg/g)	Air Conc Enzyme (ng/m^3)	Ratio of Enzyme to Aerosol (mg/g)
LVPEP Rep 1	0.0293	0.203	6.0567	
LVPEP Rep 2	0.3375	0.203	68.5125	
LVPEP Rep 3	0.1901	0.203	38.5831	
LVPEP Rep 4	0.4921	0.203	99.8998	
LVPEP Rep 5	0.4461	0.203	90.5538	

Airborne Mass Concentration - Enzyme vs Aerosol

Analytical Method	Test Group LVPEP Control (ng/m3)	LVPEP Rep 1 (ng/m3)	LVPEP Rep 2 (ng/m3)	LVPEP Rep 3 (ng/m3)	LVPEP Rep 4 (ng/m3)	LVPEP Rep 5 (ng/m3)
ELISA	0.0					
API	490	29,326	337,500	190,064	492,116	446,078
Ratio API/ELISA	----	----	----	----	----	----

Study: SDA Phase 2 — Date: 6/9/99
Study #: N003043B — Initial: [illegible]

Repeat of previous day's assay
Low Volume Product Evaluation Procedure (LVPEP)
Plate coated 6/8/99.
All filters collected 5/26/99; shaken/rotated ~1 hour and filtered 6/8/99.
Eluate refrigerated overnight and dilutions made on 6/9/99.
47 mm filter pulped with 10 mL buffer. Values below not corrected for dilution.

Each value below is a mean of four wells using high sensitivity ELISA.
Report x8 values.

			Results	
	Calibrator, 500 pg		487 pg/mL	
			97.4	
LVPEP	Replicate 1	x8	1583 pg/mL	
		x16	1169 pg/mL	
		x32	476 pg/mL	
LVPEP	Replicate 2	x8	2204 pg/mL	
		x16	1665 pg/mL	
		x32	1343 pg/mL	
LVPEP	Replicate 3	x8	1744 pg/mL	
		x16	1312 pg/mL	
		x32	477 pg/mL	
LVPEP	Replicate 4	x8	2791 pg/mL	
		x16	2363 pg/mL	
		x32	1473 pg/mL	
LVPEP	Replicate 5	x8	4511 pg/mL	
		x16	4118 pg/mL	
		x32	3277 pg/mL	
Blank Coated Filter			0 pg/mL	low out of range result

Each value below is a mean of two wells using regular sensitivity ELISA.
Report undiluted values.

			Results	
	Calibrator, 4.0 ng/mL		3.92 ng/mL	
	% of target value =		98.0	
LVPEP	Replicate 1	undilute	1.73 ng/mL	
		x2	1.64 ng/mL	
		x4	1.34 ng/mL	
		x8	0.38 ng/mL	
		x16	- ng/mL	low out of range result
LVPEP	Replicate 2	undilute	2.09 ng/mL	
		x2	1.99 ng/mL	
		x4	1.40 ng/mL	
		x8	0.77 ng/mL	
		x16	- ng/mL	low out of range result
LVPEP	Replicate 3	undilute	1.84 ng/mL	
		x2	1.66 ng/mL	
		x4	0.97 ng/mL	
		x8	- ng/mL	low out of range result
		x16	- ng/mL	low out of range result
LVPEP	Replicate 4	undilute	2.43 ng/mL	
		x2	2.53 ng/mL	
		x4	2.18 ng/mL	
		x8	1.17 ng/mL	
		x16	- ng/mL	low out of range result
LVPEP	Replicate 5	undilute	4.04 ng/mL	
		x2	3.26 ng/mL	
		x4	2.82 ng/mL	
		x8	2.08 ng/mL	
		x16	0.51 ng/mL	
Blank Coated Filter			0 ng/mL	low out of range result

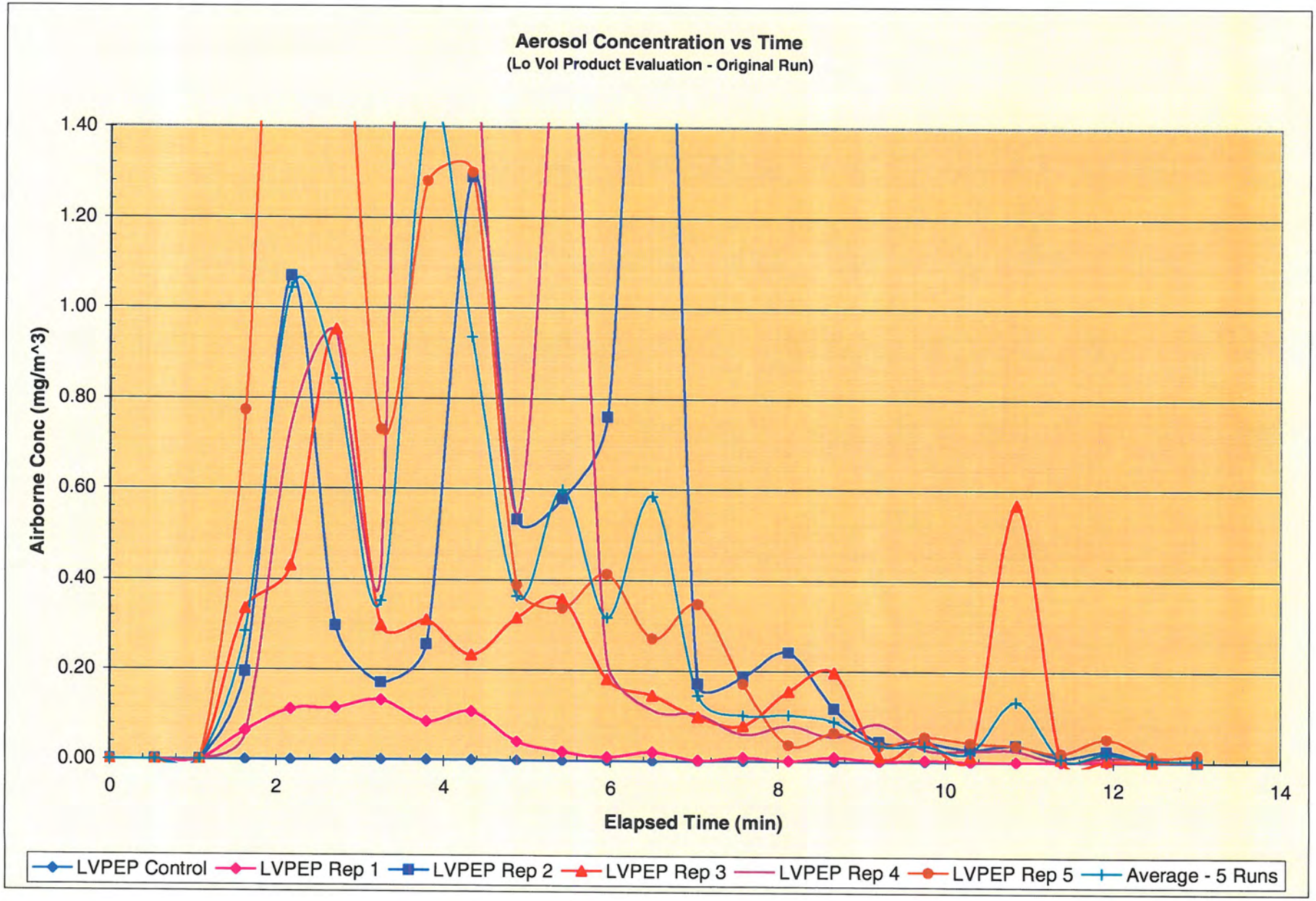

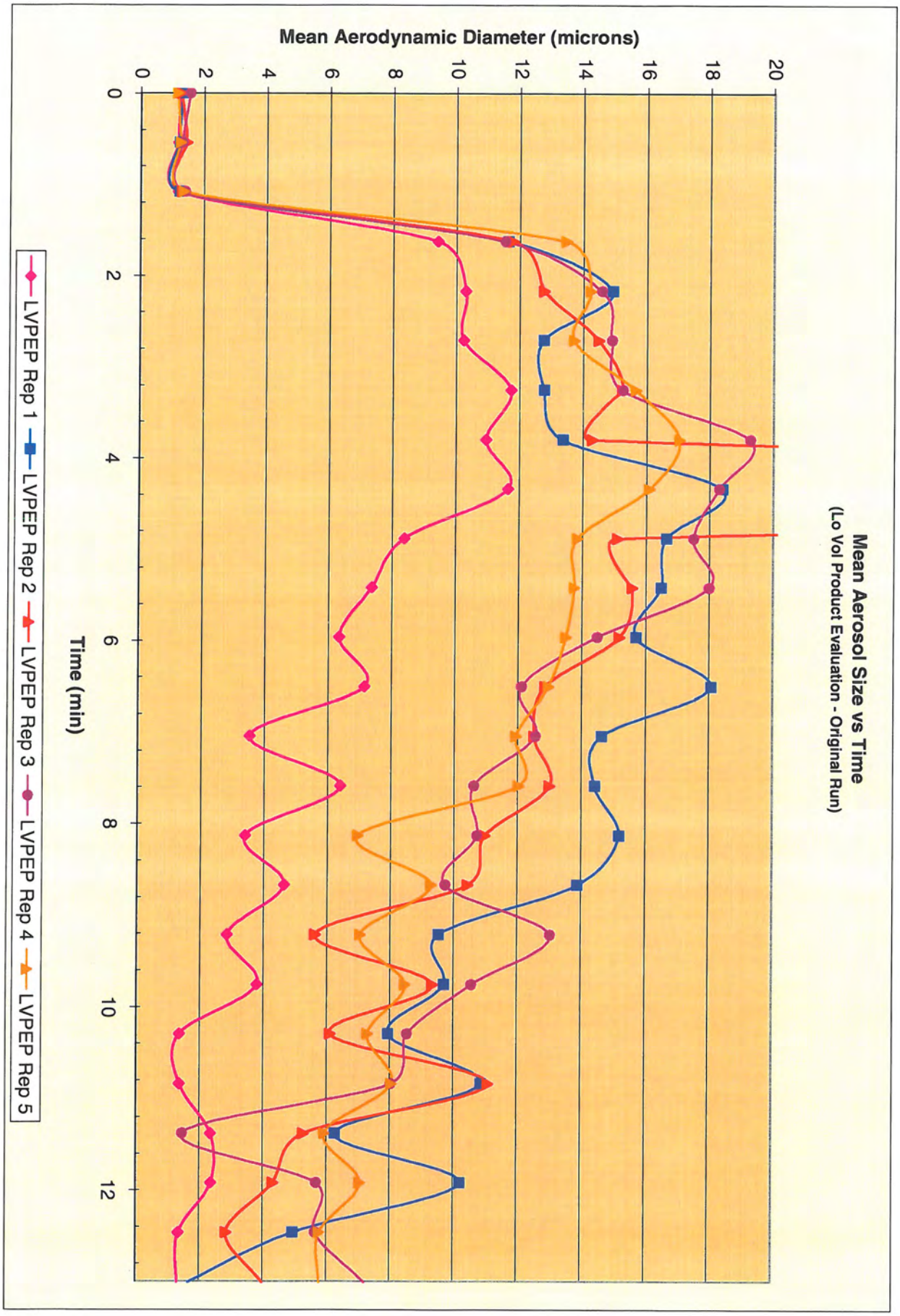

Appendix I. ELISA Method Standard Operating Procedures

Battelle
. . . Putting Technology To Work
LSL-II Building
900 Battelle Boulevard
Richland, Washington 99352

STANDARD OPERATING PROCEDURE TX.V-001-02

ELISA ANALYSIS OF ENZYMES IN FILTERED AIR COLLECTIONS (SDA)

Originator: KH Debban, Researcher — Date 5/27/99

Technical Review: KM Lee, Toxicologist — Date 5/27/99

Management Approval: JR Decker, Jr, Technical Center Manager — Date 5-27-99

Registered by QAU: John M. Pf — Date 5/27/99

Record of reviews with no changes:

No.	Review (initials/date)	
	Technical	Management
1		
2		

No.	Review (initials/date)	
	Technical	Management
3		
4		

ELISA Analysis of Enzymes in Filtered Air Collections (SDA)

I. SCOPE/PURPOSE

This method was developed and validated by Procter & Gamble Technical Service Organization, Cincinnati, OH, for Savinase enzyme and is for use on dust pad extract solutions with concentrations ranging from zero to 6 ng/mL. Enzyme protein in airborne dust is determined by the modified double antibody sandwich ELISA (Enzyme Linked Immunosorbent Assay) technique.

II. PROCEDURE

Materials:

Microtitre Plates – Nunc Immuno Plate (442404), Maxisorp, 96-well, polystyrene, or equivalent
Microtitre Plate Lids – to fit Microtitre Plates
Microtitre Mylar Plate Sealers – Dynatech Laboratories or equivalent
Multichannel Pipet – Adjustable multichannel pipet, 8 channel, 50-200 µL
Adjustable Pipetters – 1-10 µL, 20-200 µL, 200-2000 µL
Pipet tips – to fit pipettes
Plate Washer – automated or manual
Disposable Multichannel Pipetter Basin – Fisher #13-681-100 or equivalent
Microtitre Plate Reader – with 490 and 630 filters
Incubator – 32-40° C range
Centrifuge Tubes – 15 and 50 mL disposable polypropylene, with caps
Test Tube Racks – to fit centrifuge tubes
Glassware – appropriate to reagent preparation
Amber vial – 50 mL or equivalent
Glass Fiber Filter Paper – Whatman GF/C #1822-100, 10 cm; #1822-047, 47 mm
Hydrogen Peroxide, 30% H_2O_2, VWR MK524002 or equivalent
Sulfuric Acid, H_2SO_4, reagent grade
Hydrochloric Acid, HCl, reagent grade
Sodium Carbonate, Na_2CO_3, Sigma S6139 or equivalent, reagent grade
Sodium Bicarbonate, NaHCO3, Sigma 6014 or equivalent, reagent grade
Sodium Chloride, NaCl, Fisher S271-500 or equivalent, reagent grade
Sodium Phosphate Dibasic, $Na_2HPO_4.12H_2O$, Baker 3822-01 or equivalent, reagent grade
Tween 20, Baker X251-07, reagent grade, or equivalent
Citric Acid, Monohydrate, $C_6H_8O_7.H2O$, Baker 0118-01 or equivalent, reagent grade,
Bovine Serum Albumin, (BSA), RIA Grade, Sigma A7888 or equivalent
Trizma Base (THAM,TRIS), Sigma T1503 or equivalent, practical grade or better
Calcium Chloride Dihydrate, $CaCl_2.H_2O$, Sigma C5080 or equivalent, reagent grade
Sodium Thiosulfate Pentahydrate, $Na_2S_2O_3.5H_2O$, Sigma S0672 or equivalent, reagent grade
Orthophenylenediamine (OPD), 15 mg/tablet. Sigma, P4664, or equivalent
Caution: Toxic. Wear suitable protective clothing, gloves, eye/face protection
Rabbit anti-serum. Novo Nordisk RA15-12197, Obtain from Proctor & Gamble (P&G) Analytical Technical Service Organization (TSO), phone (513) 627-4615. Do not allow to freeze. Specific anti-serum will be required for each enzyme protein determined.

Materials: (continued)

Guinea pig anti-serum. Novo Nordisk GP15-12196, Obtain from P&G TSO. Do not allow to freeze. Specific anti-serum will be required for each enzyme protein determined.
Guinea pig peroxidase (guinea pig immunoglobin) – Dako Corporation, P0141.

Solutions:

Capture Antibody Buffer or use pre-weighed capsules, Sigma C3041
1.51 g Sodium Carbonate
2.93 g Sodium Bicarbonate
Deionized water to 1000 mL. pH should be 9.6 ± 0.2.
Stable 1 year at 2-8° C

Wash Buffer or use pre-weighed packets, Sigma T9039
29.22 g Sodium Chloride
1.86 g Trizma-base
1 g Bovine Serum Albumin
Deionized water to nearly 1000 mL.
Adjust pH to 8.0 with HCl.
0.5 mL Tween 20
Fill to 1000 mL volume with deionized water
Stable 1 month at 2-8° C

Bovine Serum Albumin, 2% (BSA), blocking solution
2.0 g BSA
Dilute in Wash Buffer to 100 mL
Stable 1 month at 2-8° C
Note: Each plate to be blocked requires 20 mL

Sample Preparation Buffer (SPB)
0.93 g Trizma base
4.96 g Sodium thiosulfate pentahydrate
0.147 g Calcium chloride dihydrate
29.22 g Sodium chloride
1.0 g BSA
Mix dry reagents. Add deionized water to ~ 800 mL. Dissolve.
Adjust pH to 8.0 with HCl
1.0 mL Tween 20
Deionized water to 1000 mL.
Stable 1 month at 2-8° C
Note: Must be at room temperature for use. The extraction will not be complete if cold buffer is used.

Citrate/Phosphate Buffer
7.30 g Citric acid monohydrate
23.87 g Sodium Phosphate Dibasic
Deionized water to 1000 mL. pH should be 5.0 ± 0.2.
Stable 1 year at 2-8° C

Solutions (continued):

OPD Substrate Solution

30 mL Citrate/Phosphate Buffer, pipet into 50 mL amber vial
15 mg (1 tablet) OPD
Note: Prepare about 45 minutes before use. Protect from light with amber vial.
Add 2-3 minutes before use:
10 µL 30% H_2O_2
Note: If solution turns bright yellow, discard and make fresh
Quantity sufficient for three plates

Rabbit Capture Antibody

10 µL Rabbit anti-enzyme protein serum
9.99 mL Capture Antibody Buffer
Note: Quantity sufficient for one plate

Guinea Pig Detecting Antibody

10 µL Guinea pig anti-enzyme protein serum
9.99 mL Sample Preparation Buffer
Note: Quantity sufficient for one plate

Guinea Pig Peroxidase

10 µL Guinea pig peroxidase
9.99 mL Sample Preparation Buffer
Note: Quantity sufficient for one plate

1M Sulfuric Acid

55.5 mL Sulfuric Acid, concentrated
Slowly add to 900 mL deionized water

Standards/Calibrator:

See SOP TX.V-003 for Enzyme Stock Solution (100 µg/mL) and Spike Solution (100 ng/mL)

Calibrator, 4 ng/mL:

500 µL Spike Solution (100 ng/mL)
12.0 mL Sample Preparation Buffer
Note: Calibrator may be made to different concentration as appropriate

Standards:

Concentration, ng/mL		SPB, mL
6.0	600 µL of 100 ng/mL Spike Solution	9.40
4.8	480 µL of 100 ng/mL Spike Solution	9.52
3.6	360 µL of 100 ng/mL Spike Solution	9.64
2.4	240 µL of 100 ng/mL Spike Solution	9.76
1.2	5 mL of 2.4 ng/mL	5
0.6	5 mL of 1.2 ng/mL	5
0.3	5 mL of 0.6 ng/mL	5
0.0		5

Plate Preparation:

1. Add 100 µL of rabbit capture antibody to each well of the microtitre plate and store overnight at 4°C.
   Note: Do not let plate freeze
   Do not touch bottom of microtitre plate

2. Aspirate solution from wells and wash 3 times with Wash Buffer, about 250 µL per well.

3. Add 200 µL/well of 2% BSA solution being careful not to touch the bottom or sides of the wells with the pipet tips.

4. Cover the plate and let stand for at least one hour.

5. Empty the plate and use immediately or cover with a Mylar plate sealer. Plates are stable for a minimum of 2 months.

Sample Preparation:
Note: See SOP TX.V-003 for filter pad coating and spiking.

1. Curl the filter pad (after air collection) with the collected side facing the center and place in 50 mL centrifuge tube.
   Note: Use 50 mL tube for 10 cm pads, 15 mL tubes for pads <5 cm

2. Add 25 mL Sample Preparation Buffer (room temperature) for 50 mL tubes, 10 mL if using 15 mL tubes.

3. Cap the tube and shake vigorously until pad is pulped.

4. Filter the pulped pad through a GF/C filter or centrifuge.

Assay

1. Add 50 µL, in duplicate, of each standard, calibrator, and sample to separate wells.

2. Add 50 µL/well of guinea pig detecting antibody.

2. Tap plate to mix. Incubate at 35°C for 90 minutes.

3. Wash as described in Step 2 in Plate Preparation.

4. Add 100 µL guinea pig peroxidase solution to each well.

5. Tap plate to mix. Incubate at 35°C for 90 minutes.

6. Wash as described in Step 2 in Plate Preparation.

7. Manually wash each well three times with citrate-phosphate buffer, tapping inverted plate on absorbent paper to drain wells after final wash.

8. Add 100 µL/well OPD Substrate solution maintaining a uniform pace.

Assay (continued):

9. Tap plate to mix. Incubate at 35°C for 10-60 minutes.

   Note: Determine time by color intensity falling within optical density limits of plate reader.

10. Maintaining a uniform pace, add 150 µL/well of 1 M H_2SO_4 to stop the reaction. The color changes from yellow to orange.

11. Tap plate to mix. Wipe the bottom of the plate to remove any dirt or fingerprints.

12. Measure the absorbance of each well at 490/630 nm using automated plate reader, see SOP AH.III-001. A sample program follows in Figure 1.

Calculation:

1. The plate reader constructs a calibration curve with net absorbance versus concentration in ng/mL protein and calculates the concentrations of the samples.

2. Nanograms of protein per cubic meter is determined using the following formula. Report values to nearest tenth of a nanogram.

$$ng/M^3 = \frac{(ng/mL) \times mL \text{ used to extract pad} \times \text{dilution factor, if any}}{\text{Air sample volume in cubic meters}}$$

Example Plate Layout:

	1	2	3	4	5	6	7	8	9	10	11	12
A	Std 1	Std 1	Test 1	Test 1	Test 9	Test 9	Test 17	Test 17	Test 25	Test 25	Test 33	Test 33
B	Std 2	Std 2	Test 2	Test 2	Test 10	Test 10	Test 18	Test 18	Test 26	Test 26	Test 34	Test 34
C	Std 3	Std 3	Test 3	Test 3	Test 11	Test 11	Test 19	Test 19	Test 27	Test 27	Test 35	Test 35
D	Std 4	Std 4	Test 4	Test 4	Test 12	Test 12	Test 20	Test 20	Test 28	Test 28	Test 36	Test 36
E	Std 5	Std 5	Test 5	Test 5	Test 13	Test 13	Test 21	Test 21	Test 29	Test 29	Test 37	Test 37
F	Std 6	Std 6	Test 6	Test 6	Test 14	Test 14	Test 22	Test 22	Test 30	Test 30	Test 38	Test 38
G	Std 7	Std 7	Test 7	Test 7	Test 15	Test 15	Test 23	Test 23	Test 31	Test 31	Test 39	Test 39
H	Std 8	Std 8	Test 8	Test 8	Test 16	Test 16	Test 24	Test 24	Test 32	Test 32	Test 40	Test 40

To be modified to fit number of samples assayed.

Figure 1:

Dynex Plate Reader Program (Example)

To be modified as appropriate for sample plate:

C:\REVEL\AIRFILTE.ASY Printed on 6/13/98 at 8:39:12 AM Page 1 of 2

DYNEX REVELATION 3.02

Assay type	: Endpoint
Assay title	: Enzymes on Air Filters
Password	:
Written by	: khd
Prefer	
Suffix	:
Report layout	: Laboratory information
	: Header information
	: Removed outliers
	: Edited wells
	: Data matrix
	: Curve Fit
Test wavelength	: 490 nm
Ref. wavelength	: 630 nm
Start mode	: Immediate
Calculation mode	: Endpoint
Results format	: OD

	1	2	3	4	5	6	7	8	9	10	11	12
A	S1s	S1s	T1s	T1s	T9s	T9s	T17s	T17s	T25s	T25s	T33s	T33s
B	S2s	S2s	T2s	T2s	T10s	T10s	T18s	T18s	T26s	T26s	T34s	T34s
C	S3s	S3s	T3s	T3s	T11s	T11s	T19s	T19s	T27s	T27s	T35s	T35s
D	S4s	S4s	T4s	T4s	T12s	T12s	T20s	T20s	T28s	T28s	T36s	T36s
E	S5s	S5s	T5s	T5s	T13s	T13s	T21s	T21s	T29s	T29s	T37s	T37s
F	S6s	S6s	T6s	T6s	T14s	T14s	T22s	T22s	T30s	T30s	T38s	T38s
G	S7s	S7s	T7s	T7s	T15s	T15s	T23s	T23s	T31s	T31s	T39s	T39s
H	S8s	S8s	T8s	T8s	T16s	T16s	T24s	T24s	T32s	T32s	T40s	T40s

s indicates that a sample ID is required for this well location

Blank mode	: None
Q.C. equations	:
Data matrix	: Calculated data with template
Area statistics	: No
Export to file	: ASCII Text, Matrix, comma separated

Curve Fit

Fit name	: Linear Regression
Conc. of S1	: 0.000 ng/mL
Conc. of S2	: 0.300 ng/mL
Conc. of S3	: 0.600 ng/mL
Conc. of S4	: 1.200 ng/mL
Conc. of S5	: 2.400 ng/mL
Conc. of S6	: 3.600 ng/mL
Conc. of S7	: 4.800 ng/mL
Conc. of S8	: 6.000 ng/mL
Var. std. multiplier	: No
Fit type	: Linear regression with data extrapolation
	: Y=a+bX
	: Lin/Lin axes scaling
Percentage mode	: No
Curve fit Q.C.	: No

Figure 1 (continued):

Q.C. equations	:		
Graph	: Yes		
Title	: Linear Regression Air Filter		
Error bars	: No		
X axis scaling	: Auto		
Axis label	: ng/mL		
Y axis scaling	: Auto		
Axis label	: OD		
Combine	: No		
Display all points	: No		
Dilutions	:T1 =1	T2 =1	T3 =1
	:T4 =1	T5 =1	T5 =1
	:T7 =1	T8 =1	T9 =1
	:T10 =1	T11 =1	T12 =1
	:T13 =1	T14 =1	T15 =1
	:T16 =1	T17 =1	T18 =1
	:T19 =1	T20 =1	T21 =1
	:T22 = 1	T23 =1	T24 =1
	:T25 = 1	T25 =1	T27 =1
	:T28 = 1	T29 =1	T30 =1
	:T31 = 1	T32 =1	T33 =1
	:T34 = 1	T35 =1	T36 =1
	:T37 = 1	T38 =1	T39 =1
	:T40 =1	S1 =1	S2 =1
	:S3 =1	S4 =1	S5 =1
	:S6 =1	S7 =1	S8 =1

Data conversion	
Output format	: Table: 1 dps
Table options	: Sample ID, Location, Replicate, Mean, S.D., C.V., Dilution
Table order	: S, T, C, NC, PC, CO, PR, SC, AC, N, HS
Average replicates	: Yes

DYNEX TECHNOLOGIES

Battelle
. . . Putting Technology To Work
LSL-II Building
900 Battelle Boulevard
Richland, Washington 99352

STANDARD OPERATING PROCEDURE **TX.V-002-01**

ELISA HIGH SENSITIVITY ANALYSIS OF ENZYMES IN FILTERED AIR COLLECTIONS (SDA)

Originator: KH Debban, Researcher — Date 5/11/99

Technical Review: KM Lee, Toxicologist — Date 5-12-99

Management Approval: JR Decker, Technical Center Manager — Date 5-21-99

Registered by QAU: Date 5/24/99

Record of reviews with no changes:

No.	Review (initials/date)	
	Technical	Management
1		
2		

No.	Review (initials/date)	
	Technical	Management
3		
4		

ELISA High Sensitivity Analysis of Enzymes in Filtered Air Collections (SDA)

I. SCOPE/PURPOSE

This method was developed and validated by Procter & Gamble Technical Service Organization, Cincinnati, OH, for Savinase enzyme and is for use on dust pad extract solutions with concentrations ranging from zero to 800 pg/mL. Enzyme protein in airborne dust is determined by the modified double antibody sandwich ELISA (Enzyme Linked Immunosorbent Assay) technique.

II. PROCEDURE

Materials:

Microtitre Plates – Nunc Immuno Plate (442404), Maxisorp, 96-well, polystyrene, or equivalent
Microtitre Plate Lids – to fit Microtitre Plates
Microtitre Mylar Plate Sealers – Dynatech Laboratories or equivalent
Multichannel Pipet – Adjustable multichannel pipet, 8 channel, 50-200 µL
Adjustable Pipetters – 1-10 µL, 20-200 µL, 200-2000 µL
Pipet tips – to fit pipettes
Plate Washer – automated or manual
Disposable Multichannel Pipetter Basin – Fisher #13-681-100 or equivalent
Microtitre Plate Reader – with 490 and 630 filters
Incubator – 32-40° C range
Centrifuge tubes – 15 and 50 mL disposable polypropylene, with caps
Test Tube Racks – to fit centrifuge tubes
Glassware – appropriate to reagent preparation
Amber vial – 50 mL or equivalent
Glass Fiber Filter Paper – Whatman GF/C #1822-100, 10 cm; #1822-047, 47 mm
Hydrogen Peroxide, 30% H_2O_2, VWR MK524002 or equivalent
Sulfuric Acid, H_2SO_4, reagent grade
Hydrochloric Acid, HCl, reagent grade
Sodium Carbonate, Na_2CO_3, Sigma S6139 or equivalent, reagent grade
Sodium Bicarbonate, NaHCO3, Sigma 6014 or equivalent, reagent grade
Sodium Chloride, NaCl, Fisher S271-500 or equivalent, reagent grade
Sodium Phosphate Dibasic, $Na_2HPO_4.12H_2O$, Baker 3822-01 or equivalent, reagent grade
Tween 20, Baker X251-07 or equivalent, practical
Citric Acid, Monohydrate, $C_6H_8O_7$.H2O, Baker 0118-01 or equivalent, reagent grade
Bovine Serum Albumin, (BSA), RIA Grade, Sigma A7888 or equivalent
Trizma Base (THAM,TRIS), Sigma T1503 or equivalent, practical grade or better
Calcium Chloride Dihydrate, $CaCl_2.H_2O$, Sigma C5080 or equivalent, reagent grade
Sodium Thiosulfate Pentahydrate, $Na_2S_2O_3.5H_2O$, Sigma S0672 or equivalent, reagent grade
Orthophenylenediamine (OPD), 15 mg/tablet. Sigma, P4664 or equivalent
Caution: Toxic. Wear suitable protective clothing, gloves, eye/face protection.
Rabbit anti-serum. Novo Nordisk RA15-12197, Obtain from Proctor & Gamble (P&G) Analytical Technical Service Organization (TSO) phone (513) 627-4615. Do not allow to freeze. Specific anti-serum will be required for each enzyme protein determined.
Guinea pig anti-serum. Novo Nordisk GP15-12196, Obtain from P&G TSO. Do not allow to freeze. Specific anti-serum will be required for each enzyme protein determined.
Guinea pig peroxidase (guinea pig immunoglobin) – Dako Corporation, P0141.

Solutions:

Capture Antibody Buffer or use pre-weighed capsules, Sigma C3041
1.51 g Sodium Carbonate
2.93 g Sodium Bicarbonate
Deionized water to 1000 mL. pH 9.6 ± 0.2.
Stable 1 year at 2-8° C

Wash Buffer or use pre-weighed packets, Sigma T9039
29.22 g Sodium Chloride
1.86 g Trizma-base
1 g Bovine Serum Albumin
Deionized water to nearly 1000 mL.
Adjust pH to 8.0 with HCl.
0.5 mL Tween 20
Fill to 1000 mL volume with deionized water
Stable 1 month at 2-8° C

Citrate/Phosphate Buffer
7.30 g Citric acid monohydrate
23.87 g Sodium Phosphate Dibasic
Deionized water to 1000 mL. pH should be 5.0 ± 0.2.
Stable 1 year at 2-8° C

Bovine Serum Albumin, 2% (BSA), blocking solution
2.0 g BSA
Dilute in Wash Buffer to 100 mL
Stable 1 month at 2-8° C
Note: Each plate to be blocked requires 20 mL

Sample Preparation Buffer (SPB)
0.93 g Trizma base
4.96 g Sodium thiosulfate pentahydrate
0.147 g Calcium chloride dihydrate
29.22 g Sodium chloride
1.0 g BSA
Mix dry reagents. Add deionized water to ~ 800 mL. Dissolve.
Adjust pH to 8.0 with HCl
1.0 mL Tween 20
Deionized water to 1000 mL.
Stable 1 month at 2-8° C

Note: Must be at room temperature for use. The extraction will not be complete if cold buffer is used.

Solutions (continued):

OPD Substrate Solution

30 mL Citrate/Phosphate Buffer, pipet into 50 mL amber vial
15 mg (1 tablet) OPD
Note: Prepare about 45 minutes before use. Protect from light with amber vial.
Add 2-3 minutes before use:
10 µL 30% H_2O_2
Note: If solution turns bright yellow, discard and make fresh
Quantity sufficient for three plates

Rabbit Capture Antibody for coating plates

25 µL Rabbit anti-enzyme protein serum
9.98 mL Capture Antibody Buffer
Note: Quantity sufficient for one plate

Guinea Pig Detecting Antibody

25 µL Guinea pig anti-enzyme protein serum
9.98 mL Sample Preparation Buffer
Note: Quantity sufficient for one plate

Guinea Pig Immunoglobulin Peroxidase

25 µL Guinea pig peroxidase
9.98 mL Sample Preparation Buffer
Note: Quantity sufficient for one plate

1M Sulfuric Acid

55.5 mL Sulfuric Acid, concentrated
Slowly add to 900 mL deionized water

Standards/Calibrator:

See SOP TX.V-003 for Enzyme Stock Solution (100 µg/mL) and Spike Solution (2000 pg/mL)

Calibrator, 500 pg/mL:

50 µL Spike Solution (100 ng/mL)
9.95 mL Sample Preparation Buffer
Note: Concentration of calibrator may be varied as appropriate

Standards:

Concentration, pg/mL		SPB, mL
800	80 µL of 100 ng/mL Spike Solution	9.92
400	5 mL of 800 pg/mL	5
200	5 mL of 400 pg/mL	5
100	5 mL of 200 pg/mL	5
50	5 mL of 100 pg/mL	5
0		5

Plate Preparation:

1. Add 100 µL of rabbit capture antibody to each well of the microtitre plate and store overnight at 4°C.

   Note: Do not let plate freeze
   Do not touch bottom of microtitre plate

Plate Preparation (continued):

2. Aspirate solution from wells and wash 3 times with Wash Buffer, about 250 µL per well.

3. Add 200 µL/well of 2% BSA solution being careful not to touch the bottom or sides of the wells with the pipet tips.

4. Cover the plate and let stand for at least one hour.

5. Empty the plate and use immediately or cover with a Mylar plate sealer. Plates are stable for a minimum of 2 months.

Sample Preparation:

Note: See SOP TX.V-003 for filter pad coating and spiking.

1. Curl the filter pad (after air collection) with the collected side facing the center and place in 50 mL centrifuge tube.
   Note: Use 50 mL tube for 10 cm pads, 15 mL tubes for pads <5 cm

2. Add 25 mL Sample Preparation Buffer (room temperature) for 50 mL tubes, 10 mL if using 15 mL tubes.

3. Cap the tube and shake vigorously until pad is pulped.

4. Filter the pulped pad through a GF/C filter or centrifuge.

Assay:

1. Add 100 µL, in quadruplicate, of each standard and sample to separate wells (see example plate following).

2. Tap plate to mix. Incubate at 35°C for 60 minutes.

3. Aspirate solution from wells and wash 3 times with Wash Buffer.

4. Add 100 µL/well of guinea pig detecting antibody.

5. Tap plate to mix. Incubate at 35°C for 60 minutes.

6. Aspirate solution from wells and wash 3 times with Wash Buffer.

7. Add 100 µL/well guinea pig peroxidase solution.

8. Tap plate to mix. Incubate at 35°C for 60 minutes.

9. Aspirate solution from wells and wash 3 times with Wash Buffer.

10. Manually wash each well three times with citrate-phosphate buffer, tapping inverted plate on paper towels to drain after final wash.

11. Add 100 µL/well OPD Substrate solution maintaining a uniform pace.

Assay (continued):

12. Tap plate to mix. Incubate at 35°C until suitable yellow color has developed, checking every 10 to 15 minutes up to 60 minutes.

    Note: Determine time by color intensity falling within optical density limits of plate reader.

13. Add 150 µL/well of 1 M H_2SO_4 to stop the reaction maintaining a uniform pace. The color changes from yellow to orange.

14. Tap plate to mix. Wipe bottom of the plate to remove any dirt or fingerprints.

15. Measure the absorbance of each well at 490/630 nm using automated plate reader, see SOP AH.III-001. A sample program follows in Figure 1.

Calculation:

1. The plate reader constructs a calibration curve with net absorbance versus concentration in pg/mL protein and calculates the concentrations of the samples.

2. The picograms of protein per cubic meter is determined using the following formula. Report values in whole numbers.

$$pg/M^3 = \frac{(pg/mL) \times mL \text{ used to extract pad} \times \text{dilution factor, if any}}{\text{Air sample volume in cubic meters}}$$

Example Plate Layout:

	1	2	3	4	5	6	7	8	9	10	11	12
A	Std 1	Std 2	Std 3	Std 4	Std 5	Std 6	Test 1	Test 2	Test 3	Test 4	Test 5	Test 6
B	Std 1	Std 2	Std 3	Std 4	Std 5	Std 6	Test 1	Test 2	Test 3	Test 4	Test 5	Test 6
C	Std 1	Std 2	Std 3	Std 4	Std 5	Std 6	Test 1	Test 2	Test 3	Test 4	Test 5	Test 6
D	Std 1	Std 2	Std 3	Std 4	Std 5	Std 6	Test 1	Test 2	Test 3	Test 4	Test 5	Test 6
E	Test 7	Test 8	Test 9	Test 10	Test 11	Test 12	Test 13	Test 14	Test 15	Test 16	Test 17	Test 18
F	Test 7	Test 8	Test 9	Test 10	Test 11	Test 12	Test 13	Test 14	Test 15	Test 16	Test 17	Test 18
G	Test 7	Test 8	Test 9	Test 10	Test 11	Test 12	Test 13	Test 14	Test 15	Test 16	Test 17	Test 18
H	Test 7	Test 8	Test 9	Test 10	Test 11	Test 12	Test 13	Test 14	Test 15	Test 16	Test 17	Test 18

Figure 1:

Dynex Plate Reader Program (Example):

To be modified to fit number of samples assayed.

C:\REVEL\AIRFILHS.ASY Printed on 6/13/98 at 8:38:15 AM Page 1 of 2

DYNEX REVELATION 3.02

Assay type	: Endpoint
Assay title	: High Sensitivity Enzymes on Air Filters
Password	:
Written by	: khd
Prefix	:
Suffix	:
Report layout	: Laboratory information
	: Header information
	: Removed outliers
	: Edited wells
	: Data matrix
	: Curve Fit
Test wavelength	: 490 nm
Ref. wavelength	: 630 nm
Start mode	: Immediate
Calculation mode	: Endpoint
Results format	: OD

	1	2	3	4	5	6	7	8	9	10	11	12
A	S1s	S2s	S3s	S4s	S5s	S6s	T1s	T2s	T3s	T4s	T5s	T6s
B	S1s	S2s	S3s	S4s	S5s	S6s	T1s	T2s	T3s	T4s	T5s	T6s
C	S1s	S2s	S3s	S4s	S5s	S6s	T1s	T2s	T3s	T4s	T5s	T6s
D	S1s	S2s	S3s	S4s	S5s	S6s	T1s	T2s	T3s	T4s	T5s	T6s
E	T7s	T8s	T9s	T10s	T11s	T12s	T13s	T14s	T15s	T16s	T17s	T18s
F	T7s	T8s	T9s	T10s	T11s	T12s	T13s	T14s	T15s	T16s	T17s	T18s
G	T7s	T8s	T9s	T10s	T11s	T12s	T13s	T14s	T15s	T16s	T17s	T18s
H	T7s	T8s	T9s	T10s	T11s	T12s	T13s	T14s	T15s	T16s	T17s	T18s

s indicates that a sample ID is required for the well location

Blank mode	: None
Q.C. equations	:
Data matrix	: Calculated data with template
Area statistics	: Yes

	1	2	3	4	5	6	7	8	9	10	11	12
A												
B												
C												
D												
E												
F												
G												
H												

Export to file	: ASCII Text,Matrix,comma separated

Figure 1: (continued)

C:\REVEL\AIRFILHS.ASY Printed on 6/13/98 at 8:38:15 AM Page 2 of 2

Curve Fit

Fit name	: Linear Regression
Conc. of S1	: 0.000 pg/mL
Conc. of S2	: 50.000 pg/mL
Conc. of S3	: 100.000 pg/mL
Conc. of S4	: 200.000 pg/mL
Conc. of S5	: 400.000 pg/mL
Conc. of S6	: 800.000 pg/mL
Var. std. multiplier	: No
Fit type	: Linear regression with data extrapolation
	: Y=a+bX
	: Lin/Lin axes scaling
Percentage mode	: No
Curve fit Q.C.	: No
Q.C. equations	:
Graph	: Yes
Title	: Linear Regression High Sensitivity Air Filter
Error bars	: No
X axis scaling	: Auto
Axis label	: pg/mL
Y axis scaling	: Auto
Axis label	: OD
Combine	: No
Display all points	: No

Dilutions	:T1 =1	T2 =1	T3 =1
	:T4 =1	T5 =1	T6 =1
	:T7 =1	T8 =1	T9 =1
	:T10 =1	T11 =1	T12 =1
	:T13 =1	T14 =1	T15 =1
	:T16 =1	T17 =1	T18 =1
	:S1 =1	S2 =1	S3 =1
	:S4 =1	S5 =1	S6 =1

Data conversion	:
Output format	: Table: 1 dps
Table options	: Sample ID, Location, Replicate, Mean, S.D., C.V., Dilution
Table order	: S, T, C, NC, PC, CO, PR, SC, AC, N, HS
Average replicates	: Yes

DYNEX TECHNOLOGIES

Battelle
. . . Putting Technology To Work
LSL-II Building
900 Battelle Boulevard
Richland, Washington 99352

STANDARD OPERATING PROCEDURE **TX.V-003-01**

FILTER PAD SPIKING FOR USE WITH ELISA ANALYSIS OF ENZYMES IN FILTERED AIR COLLECTIONS (SDA)

Originator: KH Debban, Researcher — Date 5/11/99

Technical Review: KM Lee, Toxicologist — Date 5/12/99

Management Approval: JR Decker, Technical Center Manager — Date 5-21-99

Registered by QAU: John M. Pyle — Date 5/24/99

Record of reviews with no changes:

No.	Review (initials/date)	
	Technical	Management
1		
2		

No.	Review (initials/date)	
	Technical	Management
3		
4		

FILTER PAD SPIKING FOR USE WITH ELISA ANALYSIS OF ENZYMES IN FILTERED AIR COLLECTIONS (SDA)

I. SCOPE/PURPOSE

Filter pads are prepared for use with the ELISA (Enzyme Linked Immunosorbent Assay) Analysis of enzymes in filtered air collections. The glycerol-acetate coating facilitates removal from adhering matter from filter pads.

II. PROCEDURE

Apparatus:

Adjustable Pipetters – 20-200 µL, 100-1000 µL
Pipet tips – to fit pipettes
Glassware – appropriate to reagent preparation
Filter Paper – Whatman GF/C #1822-100, 10 cm; #1822-024, 47 mm
Plastic bags – sealable
Gloves - Disposable
Lab Bench Cover – plastic mesh
Paper Towels

Reagents:

Hydrochloric Acid, HCl, concentrated reagent grade
Sodium Chloride, NaCl, Fisher S271-500 or equivalent, reagent grade
Tween 20, Baker X251-07 or equivalent, practical
Bovine Serum Albumin, (BSA), RIA Grade, Sigma A7888 or equivalent
Enzyme Standards, powdered. Obtain from Proctor & Gamble Analytical Technical Service Organization (TSO), Ivorydale Technical Center, phone (513) 627-4615.
Caution: Exposure may cause sensitization. Use gloves, weigh in hood.
Trizma Base (THAM,TRIS), Sigma T1503 or equivalent, practical grade or better
Calcium Chloride Dihydrate, $CaCl_2.H_2O$, Sigma C5080 or equivalent, reagent grade
Sodium Thiosulfate Pentahydrate, $Na_2S_2O_3.5H_2O$, Sigma S0672 or equivalent, reagent grade
Sodium Acetate Trihydrate – $C_2H_2O_2Na.3H_20$, MCB SX255 or equivalent, reagent grade
Glycerol, 99%+ purity, Sigma #G5516 or equivalent
Phenylmethylsulfonyl Flouride (PMSF), Sigma P7626 or equivalent, reagent grade
Caution: Highly toxic. Use gloves, weigh in hood.
Methanol, CH_3OH, Mallinckrodt 3016 or equivalent, reagent grade

Solutions:

Sample Preparation Buffer

0.93 g	Trizma base
4.96 g	Sodium thiosulfate pentahydrate
0.147 g	Calcium chloride dihydrate
29.22 g	Sodium chloride
1.0 g	BSA

Mix dry reagents. Add deionized water to ~ 800 mL. Dissolve.
Adjust pH to 8.0 with HCl

1.0 mL Tween 20

Deionized water to 1000 mL.
Stable 1 month at 2-8° C

Note: Sample Preparation Buffer must be at room temperature for use. The extraction will not be complete if cold buffer is used.

Solutions (continued):

Glycerol/Acetate Coating Solution

6.80 g Sodium acetate trihydrate
Dissolve in ~ 800 mL deionized water.
50 mL Glycerol (use graduated cylinder to measure)
Add deionized water to 1000 mL
Stable 3 months at 2-8°C

1% PMSF Solution

0.1 g PMSF
10 mL Methanol

Stable 1 year at room temperature
Note: Wear gloves and use balance in hood for weighing.

Enzyme Stock Solution

Calculate to within 0.0001 g, 1 divided by the per cent protein of standard:
i.e., 1 /1.08 = 0.9295 g
Transfer standard to 100 mL volumetric flask using ~20 mL SPB.
1 mL 1% PMSF
Bring to 100 mL volume with SPB and mix.
Dissolve a minimum of 1 hour to inactivate protein.
Volumes may be scaled down as appropriate.
Stable 1 month at 2-8°C
Note: Specific activity for savinase is 395 KNPU/g. Savinase containing 4.28 KNPU/g therefore contains (4.28/395)*1000 = 10.8 mg protein/g = 1.08% enzyme (w/w)

Spike Solutions, stable 1 month at 2-8°C

100 ng/mL Enzyme Protein, for use with High Sensitivity ELISA
100 µL Enzyme Stock Solution
Bring to volume with SPB in 100 mL volumetric flask

2000 ng/mL Enzyme Protein, for use with regular ELISA
1.00 mL Enzyme Stock Solution
Bring to volume with SPB in 50 mL volumetric flask

Note: Other concentrations may be necessary for different situations.
Volumes may be scaled down as appropriate.

Procedure:

Coating of Whatman GF/C Filter Papers

1. Place paper towels on the lab bench.
2. Place plastic mesh on top of the paper towels.
3. Wearing plastic gloves or using plastic tweezers, submerse the filter paper in the glycerol/acetate coating solution.
4. Place the filter paper on the plastic mesh.
5. Repeat the process for as many filters as needed.

6. After all the filters have been coated and placed on the plastic mesh, cover pads with another layer of plastic mesh followed by another layer of paper towels.

7. Allow the filters to dry for at least 12 hours. It is best to coat the filters at the end of the day and allow them to dry overnight.

8. Store the dried coated pads in labeled original container or sealable plastic bag in a cool dry place until needed. Stable indefinitely at room temperature.

Spiking Procedure:

1. Place a coated pad on top of an inverted beaker or on plastic mesh.

2. Pipet drop-wise and evenly about the pad, a known volume of the spike solution allowing no wicking of liquid to the surface below pad.

   Note: Each 50 μL of the 100 ng/mL spike solution equals 5 ng of enzyme protein.
   Each 50 μL of the 2000 ng/mL spike solution equals 100 ng of enzyme protein.
   Greater or smaller volumes can be used to create spikes of various levels.

3. Allow the spiked solution to dry, ~ 15-30 minutes.

4. Store the dried coated pads in a sealable plastic bag in a cool dry place until needed. Stable a minimum of 2 months at room temperature.

III. REFERENCE

Soap and Detergent Association (SDA) protocol as developed by Proctor & Gamble Technical Service Organization, Ivorydale Technical Center, OH.